554930

LAWNAIRE ZTS FS541V KAW

PARTS MANUAL

MAN 4172871

Rev. A 02-2016

SCHILLER GROUNDS CARE

OPERATOR'S MANUAL 4172870

www.ryanturf.com

CALIFORNIA

Proposition 65 Warning

Diesel engine exhaust and some of its constituents are known to the State of California to cause cancer, birth defects and other reproductive harm.

⚠ WARNING

The engine exhaust from this product contains chemicals known to the State of California to cause cancer, birth defects or other reproductive harm.

Californie Proposition 65 Avertissement

Les échappements des moteurs diesel et certains de leurs composés sont reconnus par l'Etat de Californie pour être cancérigènes, provoquer des défauts congénitaux et d'autres dangers en matière de reproduction.

⚠ AVERTISSEMENT

L'émission du moteur de ce matériel contient des produits chimiques que l'Etat de Californie considère être cancérigènes, provoquer des défauts congénitaux et d'autres dangers en matière de reproduction.

California Advertencia de la Proposicion 65

El estado de California hace saber que los gases de escape de los motores diesel y algunos de sus componentes producen cáncer, defectos de nacimiento y otros daños en el proceso de reproducción humana.

⚠ ADVERTENCIA

El estado de California hace saber que los gases de escape de este producto contienen productos quÍmicos que producen cáncer, defectos de nacimiento y otros daños en el proceso de reproducción humana.

CALIFORNIA

Proposition 65 Warning

Battery posts, terminals, wiring insulation, and related accessories contain lead and lead compounds, chemicals known to the State of California to cause cancer and birth defects or other reproductive harm. **WASH HANDS AFTER HANDLING.**

LAWNAIRE ZTS

IMPORTANT MESSAGE

Thank you for purchasing this Schiller Grounds Care, Inc. product. You have purchased a world class aerating product, one of the best designed and built anywhere.

This machine comes with an Operation and Safety Manual and a separate Setup, Parts and Maintenance Manual. The useful life and good service you receive from this machine depends to a large extent on how well you read and understand these manuals. Treat your machine properly, lubricate and adjust it as instructed, and it will give you many years of reliable service.

Your safe use of this Schiller Grounds Care, Inc. product is one of our prime design objectives. Many safety features are built in, but we also rely on your good sense and care to achieve accident-free operation. For best protection, study the manuals thoroughly. Learn the proper operation of all controls. Observe all safety precautions. Follow all instructions and warnings completely. Do not remove or defeat any safety features. Make sure those who operate this machine are as well informed and careful in its use as you are.

See a Schiller Grounds Care, Inc. dealer for any service or parts needed. Schiller Grounds Care, Inc. service ensures that you continue to receive the best results possible from Schiller Grounds Care, Inc. products. You can trust Schiller Grounds Care, Inc. replacement parts because they are manufactured with the same high precision and quality as the original parts.

Schiller Grounds Care, Inc. designs and builds its equipment to serve many years in a safe and productive manner. For longest life, use this machine only as directed in the manuals, keep it in good repair and follow safety warnings and instructions. You'll always be glad you did.

Schiller Grounds Care, Inc.
One Bob Cat Lane
Johnson Creek, WI 53038-0469

TABLE OF CONTENTS ..... **FIGURES** ..... **PAGE**

SAFETY 2-4
ASSEMBLY AND SETUP / MAINTENANCE CHART 5
MAINTENANCE 6-10
ADJUSTMENTS 11-13
BELT REPLACEMENT 14
CHAIN REPLACEMENT 15-16
SPECIFICATIONS 17-18
PARTS SECTION 19
UPPER ENGINE DECK ASSEMBLY ..... FIGURE 1 ..... 20, 21
LOWER ENGINE DECK ASSEMBLY ..... FIGURE 2 ..... 22, 23
FUEL TANK, BATTERY, RESERVOIR ..... FIGURE 3 ..... 24, 25
WHEEL ASSEMBLIES ..... FIGURE 4 ..... 26, 27
PARKING BRAKE ASSEMBLY ..... FIGURE 5 ..... 28, 29
ELECTRICAL SYSTEM ..... FIGURE 6 ..... 30, 31
TRANSAXLE ASSEMBLY ..... FIGURE 7 ..... 32, 33
OIL COOLING SYSTEM ..... FIGURE 8 ..... 34, 35
CONTROL PANEL & TOWER ASSEMBLY ..... FIGURE 9 ..... 36, 37
HANDLE CONTROLS ASSEMBLY ..... FIGURE 10 ..... 38, 39
DEPTH STOP & HOC ASSEMBLY ..... FIGURE 11 ..... 40, 41
JACKSHAFT ASSEMBLY ..... FIGURE 12 ..... 42, 43
TINE ASSEMBLY ..... FIGURE 13 ..... 44, 45
PLATFORM, PAD & JACKSTANDS ..... FIGURE 14 ..... 46, 47
COVERS AND GUARDS ..... FIGURE 15 ..... 48, 49
DECALS ..... FIGURE 16 ..... 50, 51

NOTICE !!!

Unauthorized modifications may present **extreme** safety hazards to operators and bystanders and could also result in product damage.

Schiller Grounds Care, Inc. strongly warns against, rejects and disclaims any modifications, add-on accessories or product alterations that are not designed, developed, tested and approved by Schiller Grounds Care, Inc.Engineering Department. Any Schiller Grounds Care, Inc.product that is altered, modified or changed in any manner not specifically authorized after original manufacture-including the addition of "after-market" accessories or component parts not specifically approved by Schiller Grounds Care, Inc.-will result in the Schiller Grounds Care, Inc.Warranty being voided.

Any and all liability for personal injury and/or property damage caused by any unauthorized modifications, add-on accessories or products not approved by Schiller Grounds Care, Inc.will be considered the responsibility of the individual(s) or company designing and/or making such changes. Schiller Grounds Care, Inc.will vigorously pursue full indemnification and costs from any party responsible for such unauthorized post-manufacture modifications and/or accessories should personal injury and/or property damage result.

This Operator's Manual should be regarded as part of the machine. Suppliers of both new and second-hand machines must make sure that this manual is provided with the machine.

¡LEA EL INSTRUCTIVO!

Si no lee Ingles, pida ayuda a alguien que si lo lea para que le traduzca las medidas de seguridad.

This symbol means:

ATTENTION!
BECOME ALERT!

Your safety and the safety of others is involved.

Signal word definitions:

The signal words below are used to identify levels of hazard seriousness. These words appear in this manual and on the safety labels attached to Schiller Grounds Care, Inc.machines. For your safety and the safety of others, read and follow the information given with these signal words and/or the symbol shown above.

⚠ DANGER

DANGER indicates an imminently hazardous situation which, if not avoided, **WILL** result in death or serious injury.

⚠ WARNING

WARNING indicates a potentially hazardous situation which, if not avoided, **COULD** result in death or serious injury.

⚠ CAUTION

CAUTION indicates a potentially hazardous situation which, if not avoided, **MAY** result in minor or moderate injury. It may also be used to alert against unsafe practices or property damage.

CAUTION

CAUTION used without the safety alert symbol indicates a potentially hazardous situation which, if not avoided, **MAY** result in property damage

MODEL NUMBER: This number appears on sales literature, technical manuals and price lists.

SERIAL NUMBER: This number appears only on your unit. It contains the model number followed consecutively by the serial number. Use this number when ordering parts or seeking warranty information. Located behind rider pad on frame of unit.

MAINTENANCE SAFETY

IN GENERAL

- Maintain machine according to manufacturer's schedule and instructions for maximum safety and best results.
- Park machine on level ground.
- Never allow untrained personnel to service machine.
- Adjust or repair only after the engine has been stopped and the tines have stopped rotating.
- Guards should only be removed by a qualified technician for maintenance or service. Replace when work is complete.
- Replace parts if worn, damaged or faulty. For best results, always replace with parts recommended by the manufacturer.
- Disconnect battery or remove spark plug wire(s) before making any repairs. Disconnect the negative terminal first and the positive last. Reconnect positive first and negative last.
- Do not dismantle the machine without releasing or restraining forces which may cause parts to move suddenly.
- Provide adequate support for lifted machine or parts if working beneath.
- Do not put hands or feet near or under rotating parts.
- Clean up oil or fuel spillage thoroughly.
- Replace faulty mufflers.
- To reduce fire hazards, keep the engine, muffler, battery compartment and fuel storage area free of grass, leaves, debris buildup or grease.

Tines

WARNING

- Tines are sharp and can cut. Use extra caution when handling. Wear appropriate personal protective equipment.

FUEL

WARNING

- Gasoline and diesel fuels are flammable; gasoline vapors are explosive. Use extra care when handling.
- Store only in containers specifically designed for fuel.
- When refueling or checking fuel level:
  - Stop the engine and allow to cool;
  - Do not smoke;
  - Refuel outdoors only;
  - Use a funnel;
  - Do not overfill;
  - If fuel is spilled, do not attempt to start the engine until the spill is cleaned up and vapors have cleared.

Sparks from static electricity can start fires or cause explosions. Flowing fuel can generate static electricity. To prevent static electricity sparks:

- Keep fuel containers electrically grounded.
- Do not fill containers in a vehicle or on a truck or trailer bed with a plastic liner. Fill containers on the ground away from the vehicle.
- When practical, remove gas powered equipment from the truck or trailer and refuel it on the ground. If equipment must be refueled on the truck or trailer, refuel from a portable container rather than a dispenser nozzle.
- Keep the dispenser nozzle in contact with the rim of the fuel tank or container opening until fueling is complete. Do not use a nozzle lock-open device
- Replace caps on fuel cans and tanks securely.

BATTERY

Battery acid is caustic and fumes are explosive and can cause serious injury or death.

To reduce the risk of personal injury when working near a battery:

– Use protective equipment such as, but not limited to, goggles, face shield, rubber gloves and apron when working with battery acid.
– Avoid leaning over a battery.
– Do not expose a battery to open flames or sparks.
– Be sure batteries with filler caps are properly filled with fluid.
– Do not allow battery acid to contact eyes or skin. Flush any contacted area with water immediately and get medical help.
– Charge batteries in an open, well ventilated area, away from sparks and flames. Unplug charger before connecting or disconnecting from battery.
– Your unit is factory equipped with an AGM type battery . An AGM type battery charger should be used on these when charging.

STORAGE SAFETY

– Stop the engine and allow to cool before storing.
– Drain the fuel tank outdoors only.
– Store fuel in an approved container in a cool, dry place.
– Keep the machine and fuel containers in a locked storage place to prevent tampering and to keep children from playing with them.
– Do not store the machine or fuel container near heating appliances with an open flame such as a water heater or an appliance with a pilot light.
– Keep gasoline storage area free of grass, leaves and excessive grease to reduce fire hazard.
– Clean grass and debris from aerating units, drives, mufflers and engine to help prevent fires.

JUMP STARTING

1. Be sure the jumper cables are in good condition. Turn off the ignition and all electrical accessories on both machines.
2. Position the machine with a good (charged) battery next to but not touching the machine with the dead battery so jumper cables will reach.
3. When making cable connections:
   - make sure the clamps do not touch anywhere except to intended metal parts,
   - Never connect a positive ("+" or red) terminal to a negative ("–" or black) terminal.
   - Make sure the cables won't get caught in any parts after the engines are started.
4. Connect one end of the first jumper cable to the **positive** terminal on one battery. Connect the other end to the **positive** terminal on the other battery.
5. Connect one end of the other cable to the **negative** terminal of the machine with a good (charged) battery. Make the final connection on the engine of the machine to be started, away from the battery.
6. Start the vehicle with the good battery, then the machine with the discharged battery.
7. Remove the cables in the exact reverse order of installation. When removing each clamp, take care it does not touch any other metal parts while the other end remains attached.

LAWNAIRE ZTS

SPECIFICATIONS/ MAINTENANCE CHART

ASSEMBLY / SET UP INSTRUCTIONS

1. READ THE OPERATOR'S MANUAL BEFORE ASSEMBLY.
2. Remove the brackets securing the machine to the pallet. Reinstall the caster axle nuts. Tighten the nuts. Fill tires at pressure at 15 psi on the rear tires and 25 psi on the front tires.
3. Lower the operator platform.
4. Open the rear panel and connect the ground wire to the battery.
5. Check the oil level in both the engine and the hydraulic tank, top off if necessary.
   Use 10w30 oil for the engine.
   Use 15w50 or 20w50 motor oil for the hydraulic tank.
6. Fill the fuel tank with fresh clean regular grade gasoline. Open the fuel valve.
7. Start the machine and drive it off the pallet.

MAINTENANCE OPERATION	Maintenance is an ongoing job. These intervals are maximum times between maintenance operations. Perform more often under severe conditions.						
	FIRST 5 HOURS	BEFORE EACH USE	EVERY 25 HOURS	EVERY 40 HOURS	EVERY 100 HOURS	EVERY 200 HOURS	YEARLY
ENGINE Consult the engine manual for additional information and instructions							
Check/Top Up Oil Level		X					
Check For Leaks		X					
Clean Air Intake Screen		X					
Clean Air Cleaner Precleaner			X				
Clean Air Cleaner Element			X				
Clean Cooling Fins					X		
Change Oil And Filter	X	See engine manufacturer's manual					
Check/Replace Spark Plugs						X	
TRANSAXLE*							
Check Oil Level	X	X					
Check For Leaks	X	X					
Change Oil And Filter	*					X	
MACHINE							
Check Interlock Operation		X					
Check Tire Pressures		X					
Check/Top Up Battery							X
Lubricate chains			X				
Check chain tension			X				
Lubricate All Points							X

*CHANGE TRANSAXLE OIL AFTER INITAL 75-100 HOURS.

CHECK DAILY

Operator Presence Interlock System - Start Operation
For the engine to crank, the parking brake must be ON, and the operator present control lever must be released in the neutral position. Stand on the operator platform and check, one by one, if the engine will crank with the parking brake OFF or the operator control lever held down.

Operator Presence Interlock System - Run Operation
In order for the engine to run, the operator must either be standing on the platform, or walking behind the unit with the platform up, the parking brake in the OFF position and the LH control handle held down out of the neutral position.
The engine may also run if the parking brake is in the ON position, the LH control handle is rotated up into the NEUTRAL position.
To check:

1. Start the engine and run at 1/2 throttle.
2. With the LH control handle in the NEUTRAL position rotated up, move the parking brake lever to ON move the LH control lever down. The engine should kill.

Repair machine before using if the Operator Presence Interlock System does not operate correctly in start or run. Contact your authorized dealer.

Hardware
Tighten any nuts and bolts found loose. Replace any broken or missing cotter pins. Repair any other problems before operating.

Tire pressure
Rear Tires should be kept inflated at 15 lbs/in^2 (1.05kg/cm^2). Improper tire inflation can cause rapid tire wear and poor traction. Uneven inflation can cause uneven aerating. Front tires should be 25 lbs/in^2 (1.75 kg/cm^2).

Engine Maintenance
-Air Filter: Maintain the air filter according to the manufacturer's engine owners manual.
-Engine Oil: Check engine oil level daily. Top off if necessary. See engine owners manual.

BATTERY-AGM TYPE BATTERY SUPPLIED

⚠WARNING Battery acid is caustic and fumes are explosive and can cause serious injury or death. Use insulated tools, wear protective glasses or goggles and protective clothing when working with batteries. Read and obey the battery manufacturer's instructions.

Be certain the ignition switch is OFF and the key has been removed before servicing the battery.

1. Verify battery polarity before connecting or disconnecting the battery cables.
2. When installing the battery, always assemble the RED, positive (+) cable first. and the ground, BLACK, negative (-) cable last.
3. When removing the battery, always remove the ground, BLACK, negative (-) cable first and the RED, positive (+) cable last.
4. AGM type battery. Use AGM charger when **charging. P/N 4171973**
5. Clean the cable ends and battery posts with steel wool. Use a solution of baking soda and water to clean the battery. Do not allow the solution to enter into the battery cells.
6. Tighten cables securely to battery terminals and apply a light coat of silicone dielectric grease to the terminals and cable ends to prevent corrosion. Keep terminal covers in place.

TRANSAXLE & HYDRAULIC OIL

Do not perform engine maintenance without the engine off and spark plug wires disconnected.

CAUTION

- Check cold.
- Add 20w50 oil if necessary to the indicated level.
- Do not overfill. When the oil warms up it expands. If overfilled cold, the oil may overflow at operating temperature.

Change the transaxle oil after the first 75-100 hours, then every 500 hours or yearly.

It is essential that the exterior of the transaxle be free of debris, prior to fluid maintenance.

1. Raise the machine on the built in jack stands. See jackstands section pg. 19. Put an oil drain pan under the hydraulic oil filter located under the center of the machine. Remove the filter **A**. This will drain the oil from the reservoir. Remove the hose from the filter to each transaxle. Remove the filter adaptor **C** from each transaxle to drain the transaxles. With another drain pan, drain the remaining oil from the reservoir through the drain **D** on the lower left side of the reservoir. Dispose of the used oil and filter properly.
2. Apply pipe compound to the reservoir drain plug and reinstall in the reservoir. Check the O-ring seal on the filter adaptor. Replace the O-ring if there are any nicks or cuts. Wipe the mounting surface on each transaxle. Reinstall the filter adaptors to the transaxles. Tighten until the adaptor body contacts the transaxle mounting surface. Wipe the filter head mounting surface. Oil the gasket of a new hydraulic oil filter and install on the filter head. Tighten 3-4 to 1 turn past the point where the gasket contacts the filter head.
3. Fill the reservoir with 20w50 (15w50 is acceptable) motor oil to the top. (Approximately 4 qts.).
4. Have more oil ready. Start the machine and watch the oil level in the sight tube on the reservoir. Add oil as the level drops below the "FULL COLD" mark. Run the machine until the oil level stabilizes.
5. Purge the transaxles, following the purging procedures. **See Purging Transaxles Page 24**.

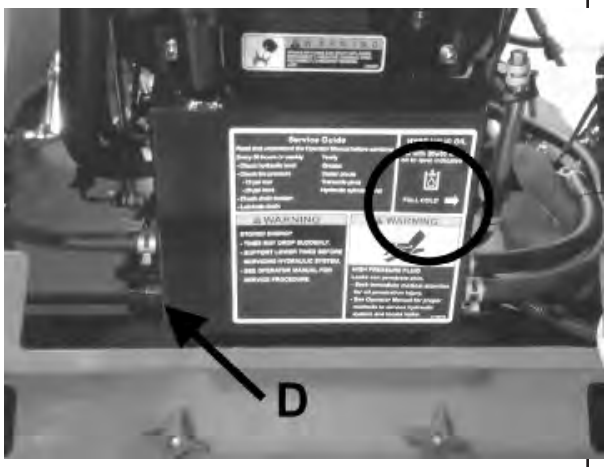

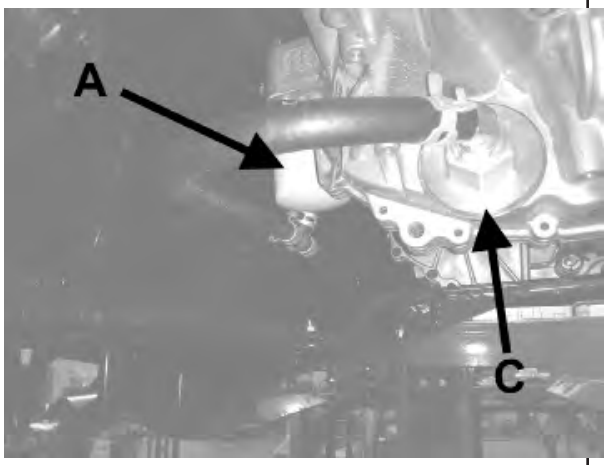

ENGINE OIL

Do not perform engine maintenance without the engine off and spark plug wires disconnected.

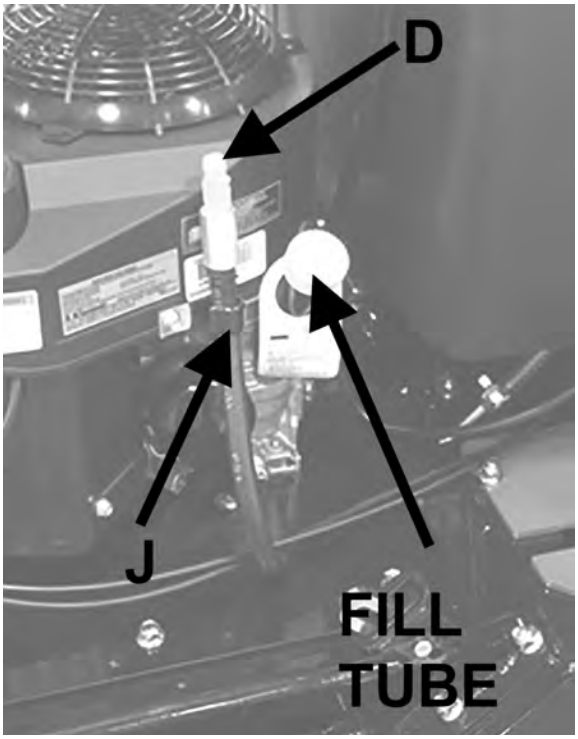

AFTER FIRST FIVE (5) HOURS

While the engine is warm:

1. Release the oil drain hose assembly from the engine clip **J**. Lay hose assembly over the frame edge.
2. Remove the rubber cap **D** from the tip of the hose assembly and turn the drain valve to allow oil to drain from the engine. Dispose of used oil in accordance with local requirements.
3. Clean drain valve and tighten the plastic portion of the drain valve back into the metal portion of the valve. Replace rubber cap over the tip of the valve. Replace hose assembly back into engine clip.
4. Change oil filter.
5. Fill the crankcase with fresh oil to the full mark. Do not overfill. See engine manual for oil specifications.

DAILY

1. Check oil level with the dipstick.
2. If oil is needed, add fresh oil of proper viscosity and grade. See engine manual for oil specifications. Do not overfill.
3. Replace dipstick before starting engine.

PERIODIC OIL CHANGES

1. See engine manual for oil and filter change intervals after the break-in period.
2. Follow instructions for first oil change, above.

SPARK PLUGS

Remove each plug and check condition.

– Good operating conditions are indicated if the plug has a light coating of grey or tan deposit.

– A white blistered coating indicates overheating. A black coating indicates an “over rich” fuel mixture. Both may be caused by a clogged air cleaner or improper carburetor adjustment.

– Do not sandblast, wire brush or otherwise attempt to repair a plug in poor condition. Best results are obtained with a new plug.

– Set plug gap as specified in engine manual.

FUEL FILTER

An in line fuel filter is located in the fuel supply line. Inspect at every oil change to make sure it is clean and unobstructed. Replace if dirty.

PURGING TRANSAXLES

Due to the effects air has on efficiency in hydrostatic drive applications, it is critical that it be purged from the system.

These purge procedures should be implemented any time a hydrostatic system has been opened to facilitate maintenance or any additional fluid has been added to the system.

Purging may be required if the unit shows any of the following symptoms:

- Noisy operation.
- Lack of power or drive after short term use.
- High operation temperature, excessive oil expansion.

1. Check the transaxle fluid, fill to proper level, if required.
2. Raise the drive wheels off the ground. Support unit with jack stands or other suitable means.
3. With the bypass valve open, and the engine running, slowly move the control levers in both forward and reverse directions 5 to 6 times. As air is purged from the unit, the oil level will drop.
4. With the bypass valve closed, and the engine running, slowly move the control levers in both forward and reverse directions 5 to 6 times.
5. Stop engine. Check the transaxle fluid level, add fluid as required.
6. It may be necessary to repeat steps 3-5 until all the air is completely purged from the system. When the transaxle moves forward and reverse at normal speed, purging is complete.
7 .Lower the machine from the jack stands, Stop the engine and pin the jackstands in the operating position.

ENGINE COOLING

Continued operation with a clogged cooling system will cause severe overheating and can result in engine damage.

- **Daily**: Clean air intake screen **S** on air cooled engines.
- **Every 100 hours**: Clean cooling fins beneath blower housing **H** with reference to information in the engine manufacturer's manual.

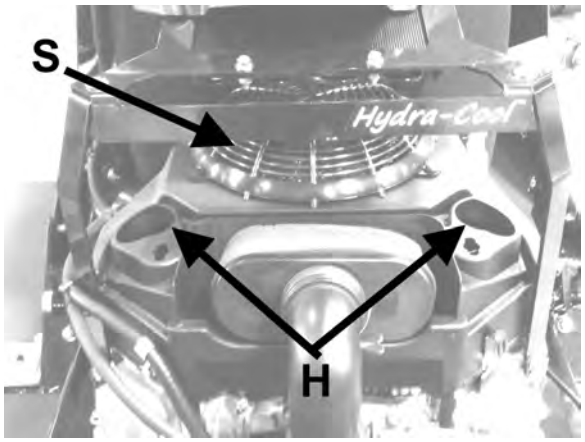

TINES

Tines can be sharp. Wear gloves when working around tines to help prevent inadvertent injuries.

Tines:

– Replace damaged or broken tines.
– Do not weld or straighten tines.
– Clean tines after use, inside and out.
– Apply a light coat of oil to tines to prevent rusting.

WARNING

SPECIFIC TORQUES

Tine BOLTS	15-20 FT-LBS (20-27 Nm)
WHEEL LUG NUTS	75-100 FT-LBS (102-135.5 Nm)
ENGINE PULLEY MOUNTING BOLT	50-60 FT-LBS (68 Nm-81Nm)
WHEEL HUB NUT	120-140 FT-LBS (162.5-190 Nm)

CLEANING MACHINE

Clean the machine after use. Compressed air is recommended. Do not use a pressure washer. The machine will run cooler and last longer if kept free of clippings and other debris. A clean machine also reduces the risk of fire due to accumulation of combustible debris and chaff.

Brush or blow clippings and debris off the machine. DO NOT use a pressure washer.

WASHING MACHINE

CAUTION: Improperly washing a machine can cause water to enter bearings and other components. This can greatly reduce component life.

- DO NOT use a pressure washer. Do not direct water at bearings or seals. High pressure water can blow past seals and enter sealed bearings.
- Allow the machine to cool down before washing. Water on a warm machine can be sucked into sealed bearings as they cool.
- Avoid getting electrical connections wet. Water can cause electrical faults and corrosion of electrical components.

MAXIMUM AERATION DEPTH

Depth stops set the maximum aeration depth. Maximum aeration depth may be adjusted by changing the hole the depth stop pin is in. Typical aeration depth is 2 1/2 - 3” (60-75 mm). Pins **J1** on both sides of the machine need to be in the same hole so the tine frame is not twisted during operation. **Figure 1**

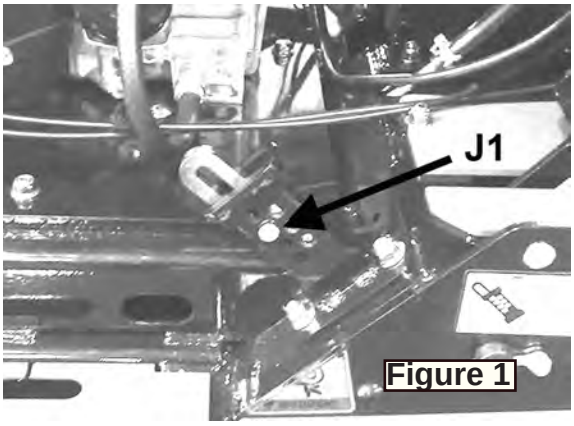

Figure 1

PARKING BRAKE CABLE

The parking brake cable is adjusted on the transaxle end of the cable. **Figure 2**

1. Move the parking brake lever to the "ON" position.
2. Center the threaded conduit fitting on the mounting bracket. Secure by tightening the jam nuts against the bracket. Install the bracket loosely to the frame. Pull the cable conduit until the barrel fitting just touches the bracket on the brake lever.

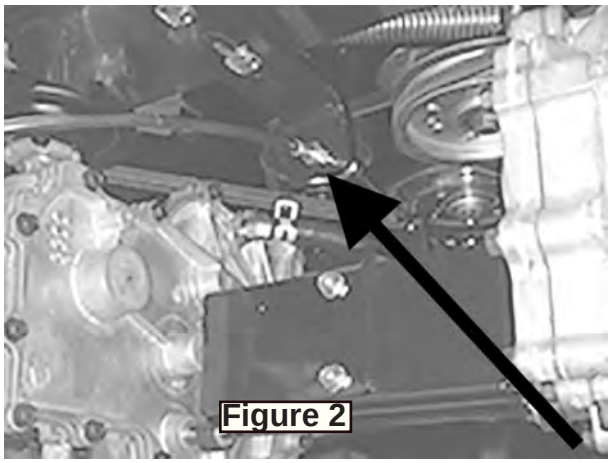
Figure 2

PARKING BRAKE SWITCH

The parking brake switch needs to be adjusted so the plunger is depressed when the parking brake is "OFF". **Figure 3**

1. Move the parking brake to the "OFF" position.
2. Loosen the parking brake switch mounting screws and move the switch until the plunger is depressed almost even with the body. Tighten the screws

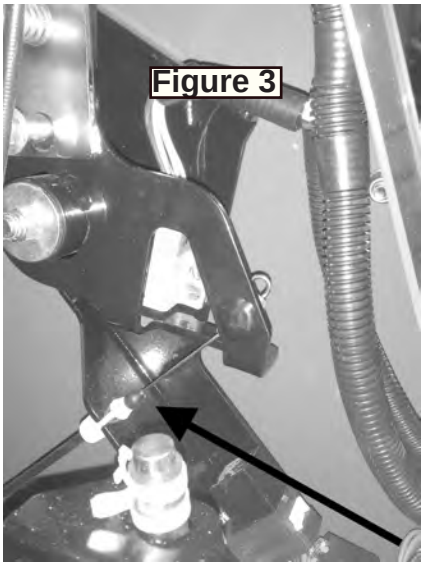
Figure 3

FRONT CONTROL REFERENCE BAR

The front control reference bar is mounted to the control panel with slots. Moving the bar forward in the slots allows greater forward speed may be obtained. Moving it back reduces the maximum forward speed. **Figure 4**

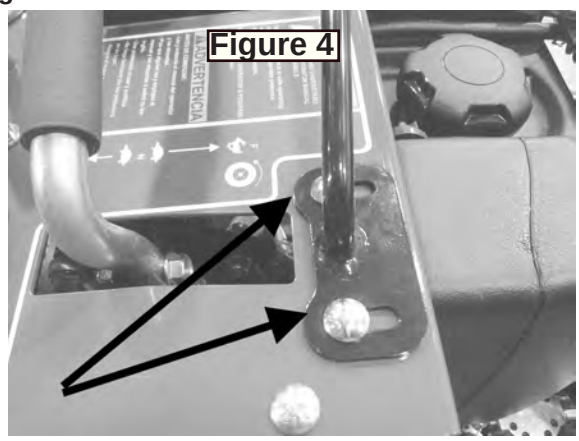
Figure 4

TRACTION CONTROL LINKAGE

The transaxles on this machine are spring loaded to the neutral position. The traction control levers need to be adjusted so the LH lever is in the neutral slot when the tractions are released. The right hand lever is adjusted to line up with the left hand lever.

To Adjust:

1. Loosen the jam nuts on either end of the control rod. Note: the end nearest the flats on the rod has left hand threads. Adjust the left rod by turning it to locate the left hand traction lever as desired.
2. Tighten the jam nuts against the rod ends to lock the adjustment.
3. Complete the adjustment by turning the right rod to line up the right traction lever with the left one.

Moving the location of the traction lever in the slot by way of adjustment can be used to affect top forward speed and reverse speed of the unit within the limits of the transaxles control stroke. Adjusting the LH control to the rear of the neutral slot will increase forward speed by reducing the available stroke for reverse and lowering maximum reverse speed. Do not adjust beyond the point where the end of the hydrostat stroke is reached before the control lever hits the front reference bar with the reference bar moved all the way forward.

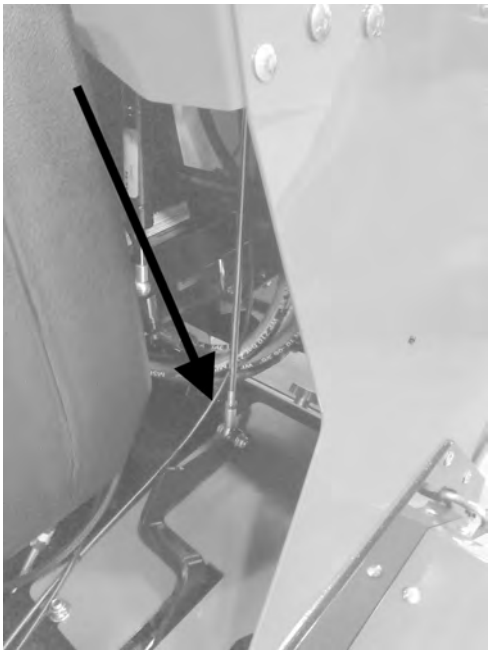

TIRE SCRAPERS

Rear tire scrapers **P** are provided to prevent mud build up on the drive tires during operation in muddy conditions. The tire scrapers should be positioned so there is about 1/8" (3mm) clearance between the wheel and the scraper.

To Adjust:

1. Loosen the bolts securing the tire scrapers.
2. Position the tire scraper 1/8" (3mm) from the nearest tire surface.
3. Tighten bolts.

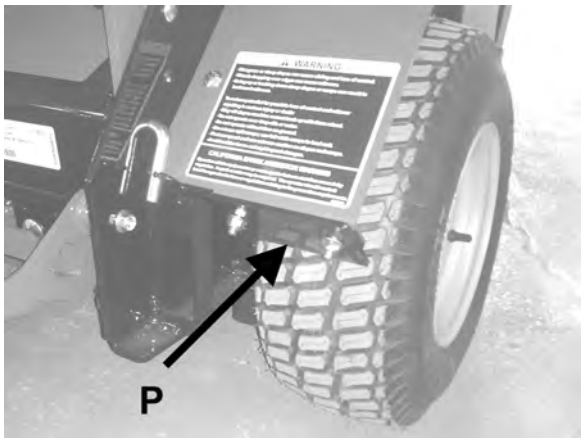

CHAINS

Tines may drop suddenly. Support the tines when working underneath them. NOTE: It is normal for there to be some play in the chain.

WHEEL AND TINE DRIVE CHAIN ADJUSTMENTS

1. Raise the machine and support it on the built in jack stands. See jack stands section page 19. Turn off the engine. This will allow one of the sprockets to turn freely so the idler can take up the slack.
2. Remove the side chain covers.
3. Tension by loosening the idler bolts and sliding the idler in the adjusting slot to remove slack from the drive. Tighten the idler bolts. Replace chain covers.

NOTE: If there is no more adjustment, the chain needs to be replaced. See Belt / Chain Replacement Section

4. Start the engine and lower the machine. Stop the engine and pin the jack stands in the operating position.

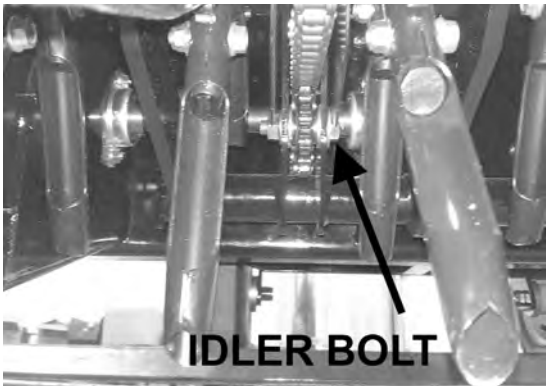

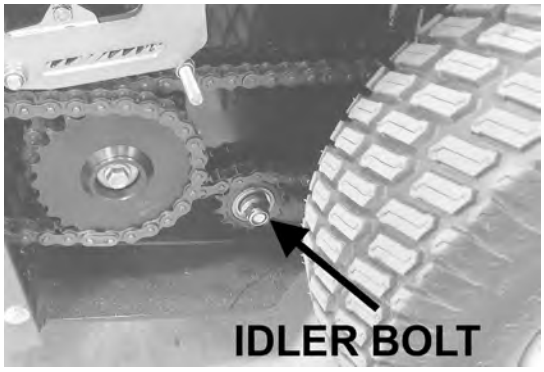

MAIN DRIVE CHAIN ADJUSTMENT

The main drive chain has an automatic tensioning system that normally does not require adjustment. As the chain wears, the tensioner advances and locks the idler in the new position. If the automatic tension has advanced all the way, it may be reset.

1. Raise the machine and support it on the built in jack stands. Turn off the engine.
2. Remove the front and side chain covers. Push down on the spring end of the tensioner to disengage the locking teeth. Pull the tensioner forward and lock it in place by setting the bolt in the locking notch.
3. Rotate the tire to get all the slack out of the top span of the chain.
4. Loosen the idler bolts and move the idler in the adjusting slot to remove the slack in the chain. Tighten the idler bolts.
5. Move the tensioner off the locking notch to engage the locking teeth.
6. Reinstall the chain covers. Start the engine and lower the machine. Stop the engine and pin the jack stands in the operating position.

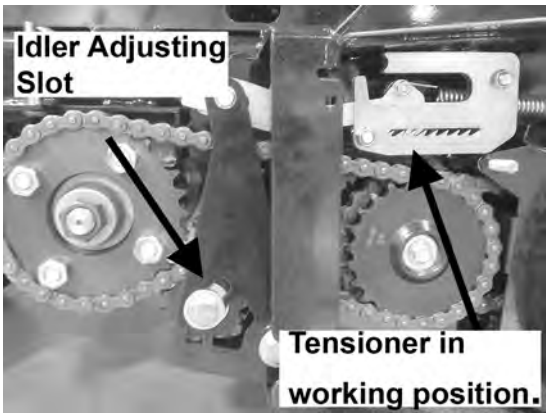

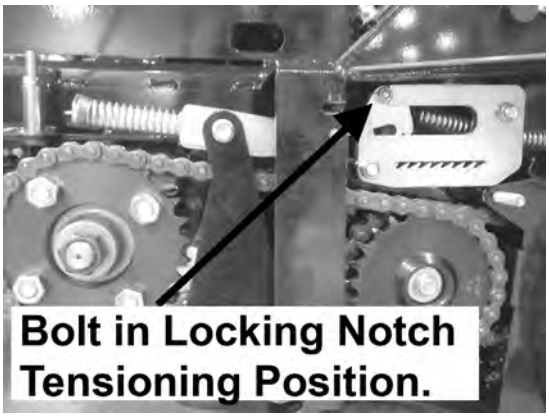

NOTE: Use replacement belts from Schiller Grounds care, Inc. not general purpose belts. Schiller Grounds Care, Inc. belts are specifically designed for the loads of this machine and will normally provide longer service life.

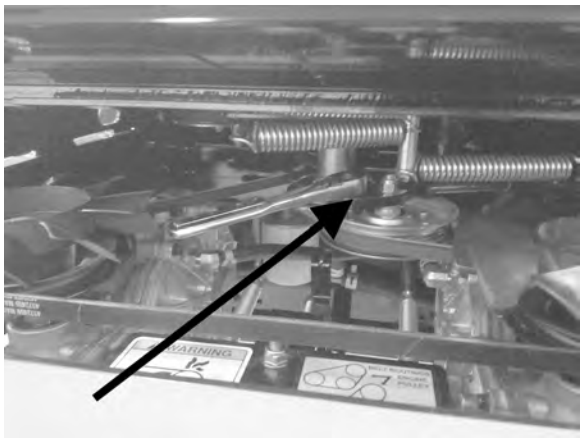

ENGINE-TRANSAXLE BELT

1. Remove the front cover. (The two knobs which secure it are located on the underside of the machine.)
2. Rotate the engine-transaxle idler arm in a counter-clockwise direction with a 3/8" ratchet handle to allow removal of the belt. Remove the belt from the idler pulley and then from the remaining pulleys.
3. Loop a new belt around the transaxle and engine pulleys. Rotate the idler arm in a counter-clockwise direction to enable the new belt to be installed in the idler pulley.
4. Reinstall the engine-transaxle belt.
5. Reinstall the front cover.

ENGINE-HYDRAULIC PUMP BELT

1. Remove the front cover. (The two knobs which secure it are located on the underside of the machine.)
2. Remove the engine-transaxle belt.
3. Rotate the engine -hydraulic pump idler in a clockwise direction to allow removal of the belt.
4. Loop a new belt around the pump and engine pulleys. Rotate the engine-hydraulic pump idler in a clockwise direction to enable the new belt to be installed in the idler pulley.
5. Reinstall the engine-transaxle belt.
6. Reinstall the front cover.

NOTE: It is recommended replacement chains from Schiller Grounds care, Inc. be used. Schiller Grounds Care, Inc. supplies a premium quality chain cut to the correct length. Replace all chains together for best results under normal circumstances.

Tension on new chains will need to be adjusted after the first several hours of operation after the chains run in. See Chain Adjustment Section.

MAIN DRIVE CHAIN

1. Start the engine and raise the machine on the jack stands. See jack stands section page 19. Stop the engine. Open the transaxle by pass valves so you can rotate the tines and axles manually.
2. Remove the front, side and tine chain covers.
3. Push down on the spring end of the tensioner to disengage the locking teeth. Pull the tensioner forward and lock it in place by setting the bolt in the locking notch.

NOTE: If replacing all chains, leave main chain broken and lying in place while the wheel and tine chains are replaced. It is easier to replace those chains with the main chain broken because the wheel and tine sprockets turn freely with the main chain disconnected.

4. Break the chain by removing the connector link. Inspect the sprockets. If any sprockets are worn, remove the chain and replace sprockets before installing the new chain. If the sprockets are still in good condition, connect the new chain to the old chain and use the old chain to pull the new chain around the sprockets. Remove the old chain and connect the ends of the new chain with a new connector link. NOTE: Install all connector links so the closed end is in the direction of forward travel.
5. Push the idler up to take all the slack out of the new chain and tighten the idler bolt. Make sure the slack is out of the top span of the chain. Move the tensioner off the locking notch to engage the locking teeth.
6. Reinstall the chain covers. Start the engine and lower the machine. Stop the engine and pin the jack stands in the operating position.

TINE CHAIN

Tines may drop suddenly. Support tines when working underneath them.

1. Start the engine and raise the machine on the jack stands. Stop the engine. Open the transaxle by pass valves so you can rotate the tines and axles manually.
2. Remove the front, side and tine chain covers.
3. Break the main chain and leave it lying on the machine. **Figure 1**
4. Loosen the idler mounting bolt and back off the idler.
5. Break the chain by removing the connector link. Inspect the sprockets. If any sprockets are worn, remove the chain and replace sprockets. If the sprockets are still in good condition, connect the new chain to the old chain and use the old chain to pull the new chain around the sprockets. Remove the old chain and connect the ends of the new chain with a new connector link. NOTE: Install all connector links so the closed end is in the direction of forward travel.
6. Take the slack out of the chain by moving the idler in the adjusting slots. Tighten the idler mounting bolt. Reinstall main chain.
7. Reinstall the chain covers. Start the engine and lower the machine. Stop the engine and pin the jack stands in the operating position.

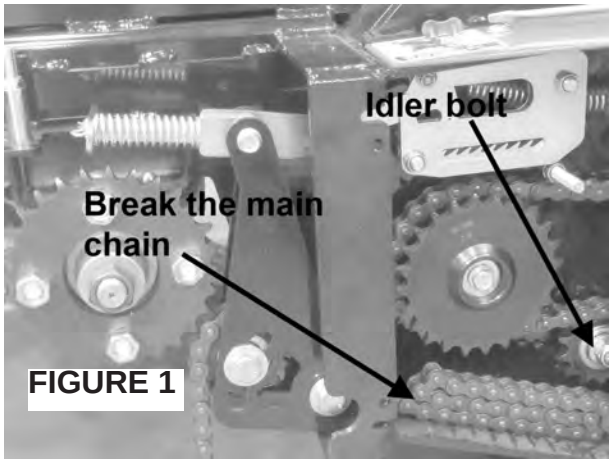

FIGURE 1

WHEEL CHAIN

1. Start the engine and raise the machine ion the jack stands. See jack stands section page 19. Stop the engine. Open the transaxle by pass valves so you can rotate the tines and axles manually.
2. Remove the front, side and tine chain covers.
3. Break the main chain and leave it lying on the machine. **Figure 1** Loosen the idler bolt and back the idler off.
4. Remove the wheel.
5. Remove the axle assembly from the machine. take the wheel chain off the axle sprocket. **Figure 2**
6. Break the chain by removing the connector link. Inspect the sprockets. If any sprockets are worn, remove the chain and replace sprockets. If the sprockets are still in good condition, connect the new chain to the old chain and use the old chain to pull the new chain around the sprockets. Remove the old chain and connect the ends of the new chain with a new connector link. NOTE: Install all connector links so the closed end is in the direction of forward travel.
7. Set the axle sprocket inside the chain loop and reinstall the axle assembly to the frame. Install the wheel assembly.
8. Take the slack out of the chain by moving the idler in the adjusting slots. Tighten the idler mounting bolt. Reinstall main chain.
6. Reinstall the chain covers. Start the engine and lower the machine. Stop the engine and pin the jack stands in the operating position.

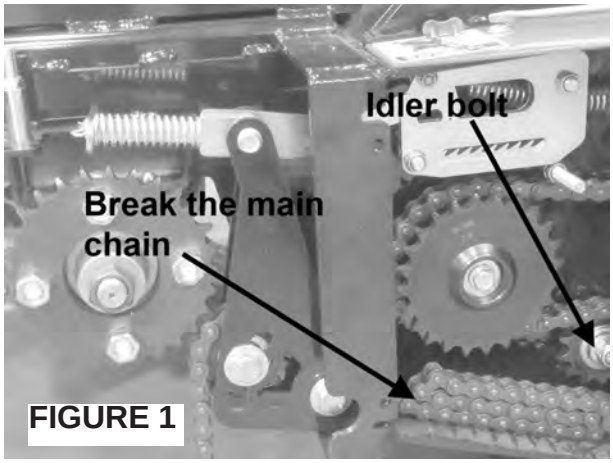

FIGURE 1

FIGURE 2

SPECIFICATIONS

ENGINES:
Construction: Aluminum block with cast-in cast iron sleeves. Aluminum head.
Configuration: 4-stroke, vertical shaft, V-twin cylinder, overhead valve, air-cooled.

DRIVE SYSTEM:
Transaxles: Dual HydroGear ZT3200 Commercial Duty Hydrostatic transaxles (10cc Pumps)
Turn Radius: True Zero

CONTROLS:
Throttle, choke, PTO switch, key switch, operator present, traction levers (1 per wheel), parking brake, tine raise/lower, tine down pressure.

GROUND SPEED:
Forward 0-7.4 mph (0-11.9 kph)
Reverse 0-3.5 mph (0-5.6 kph)

BRAKES:
Hydrostat provides dynamic braking
Parking brake: Mechanical paul type in transaxle

TRANSMISSION DRIVE SYSTEM:
Belt from engine to hydrostat input shafts, hydrostatic drive to wheels and tines via #50 chain.

TURNING RADIUS:
True zero tines up.
Approximately 48" radius tines down.

HYDRAULIC RESERVOIR CAPACITY:
Reservoir 2.75 quarts
Transaxles 2 quarts
Total Capacity 6.75 quarts

POWER STEERING:
Independently controlled drive wheels.

WEIGHT:
554930.... Dry : Approximately 1210 lbs.
Wet: Approximately 1245 lbs.

DRIVE TIRES:
18 X 6.50-8
Pressure: 15 p.s.i. (1.05 kg/cm²)

CASTERS:
13 X 5.00-6
Pressure: 25 p.s.i. (1.75 kg/cm²)

AERATION:
TINES:
3/4" (19mm) formed from .08 in hardened chrome molybdenum alloy steel. 48 per unit.

PENETRATION DEPTH:
2-5" (50-250 mm) maximum
Adjustable depth set for consistent depth.

AERATION WIDTH:
30" (762mm)

HOLE PATTERN:
3-3/4" X 7" (95mm X 178mm) on center

PRODUCTION:
Up to 92,400 sq. ft./hour

ENGINE	
MODEL NUMBER	554930
MANUFACTURER	KAWASAKI
MODEL	FS541V
CYLINDERS	2
COOLING	Air
FUEL	Gasoline
BORE/STROKE	2.9" x 2.8" (73 x 72 mm)
DISPLACEMENT	36.8 ci (603 cc)
COMPRESSION	8.1:1
OUTPUT POWER	Refer to engine manufacturer's specifications and website
OUTPUT TORQUE	31.0 ft-lb (42.1 Nm) @2200 rpm
OIL CAPACITY	1.8 qt (1.7L)
LUBRICATION	Full Pressure
CYLINDER BLOCK	Aluminum with cast iron sleeve
CYLINDER HEAD	Aluminum
GOVERNOR	Mechanincal
AIR CLEANER	Dual Element
IGNITION SYSTEM	Electronic
CHARGING SYSTEM	12V-15AMP
BATTERY	12V
FUEL CAPACITY	5.0 GAL (18.9 L)
FUEL TANK	Polyethylene
FUEL CONSUMPTION @ MAX LOAD/ SPEED	1.35 gal/hr (5.11 L/hr)

PARTS SECTION

FIGURE 1

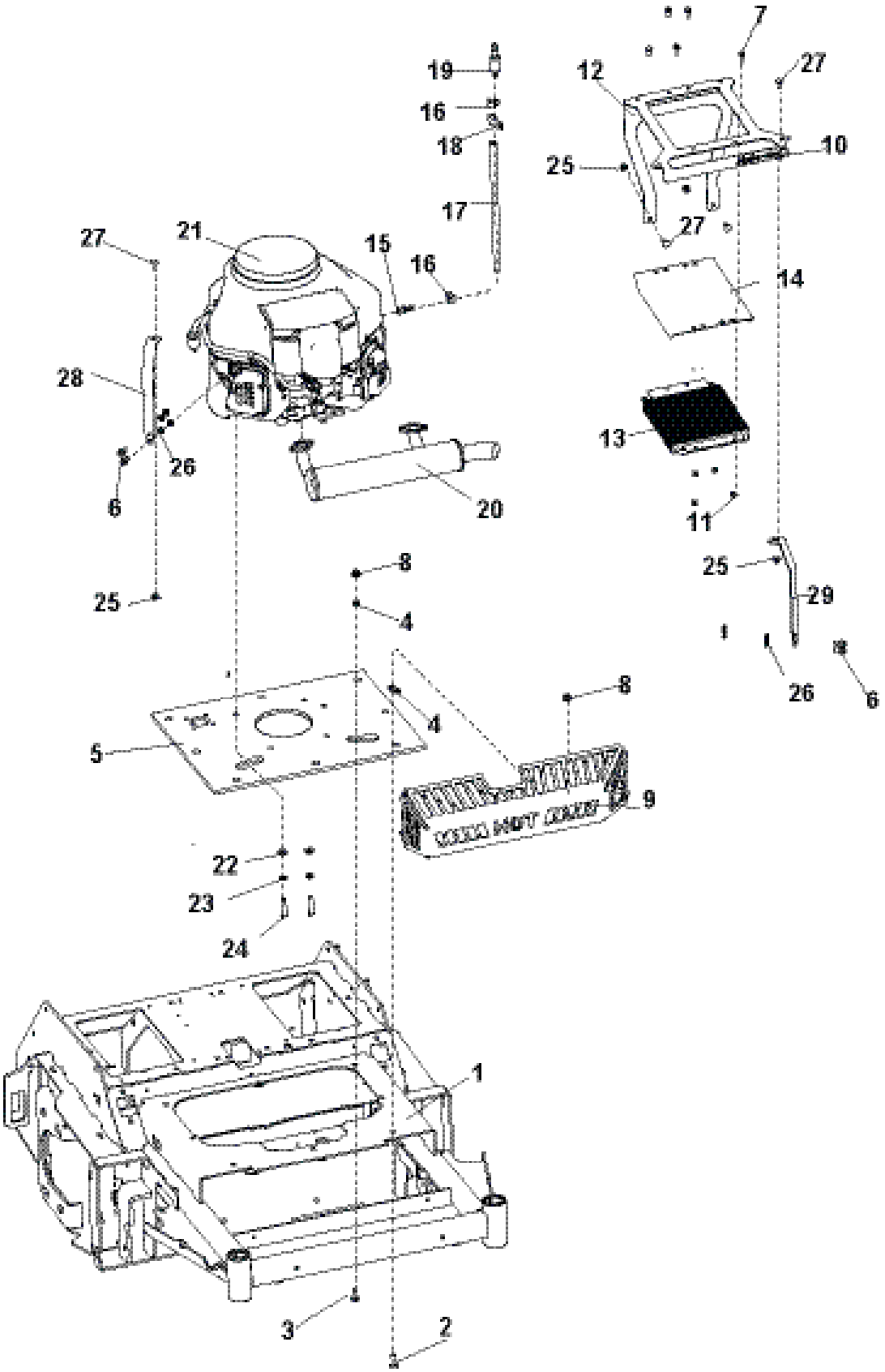
19
16
18
17
12
7
27
10
25
27
14
27
21
15
16
28
26
6
20
13
11
25
29
26
6
8
4
25
8
4
5
9
22
23
24
1
3
2

UPPER ENGINE ASSEMBLY

FIGURE 1

ITEM	PART NO.	DESCRIPTION	QTY
1	4173494	S-MAIN FRAME	1
2	64018-7	BLT-CRG 3/8-16X1-1/4	2
3	64018-44	BLT-CRG 3/8-16X1 SN	6
4	64001-6	NUT-HEX JAM 3/8-16	8
5	4171512.7	PLT-ENGINE MOUNTING	1
6	64263-007	BLT-FLG HD M8-1.25 X 20	4
7	64262-002	BLT-FLG HD 1/4-20 X 3/4	4
8	64268-03	NUT-FL NYLON LOCK 3/8-16	8
9	4172292.7	GUARD-MUFFLER	1
10	4172912	LABEL-HYDRA-COOL	1
11	64229-01	NUT-NYLON LOCK 1/4-20	4
12	4172735.7	BRKT-OIL COOLER	1
13	2188173	COOLER-OIL	1
14	2720891.7	SCREEN-OIL COOLER	1
15	4164252-001	FITTING-3/8NPT TO 3/8 BARB	1
16	88042-03	CLAMP, HOSE 5/8	2
17	69053-05	HOSE, HYDRAULIC 14"	1
18	48412-01	CLIP-CABLE 3/4 J X 10.32	1
19	4164251	DRAIN VALVE	1
20	4164359	MUFFLER-FS600 KAW	1
21	4164382	ENG-18HP KAW FS541V ES	1
22	64163-69	WSHR .391X.88X10 GA	2
23	64006-03	LOCKWSHR-3/8 HELICAL	2
24	64123-87	BLT-HEX 3/8-16 X 1-3/4	2
25	64268-02	NUT-FL NYLON LOCK 5/16-18	4
26	64163-02	WSHR .321X.593X11GA	7
27	64018-51	BLT-CRG 5/16-18 X 3/4 SN	4
28	4172746.7	BRKT-COOLER, SPRT RH	1
29	4172876.7	BRKT-COOLER, SPRT LH	1

ITEM	PART NO.	DESCRIPTION	QTY

*** NOT ILLUSTRATED**

RYAN

FIGURE 2

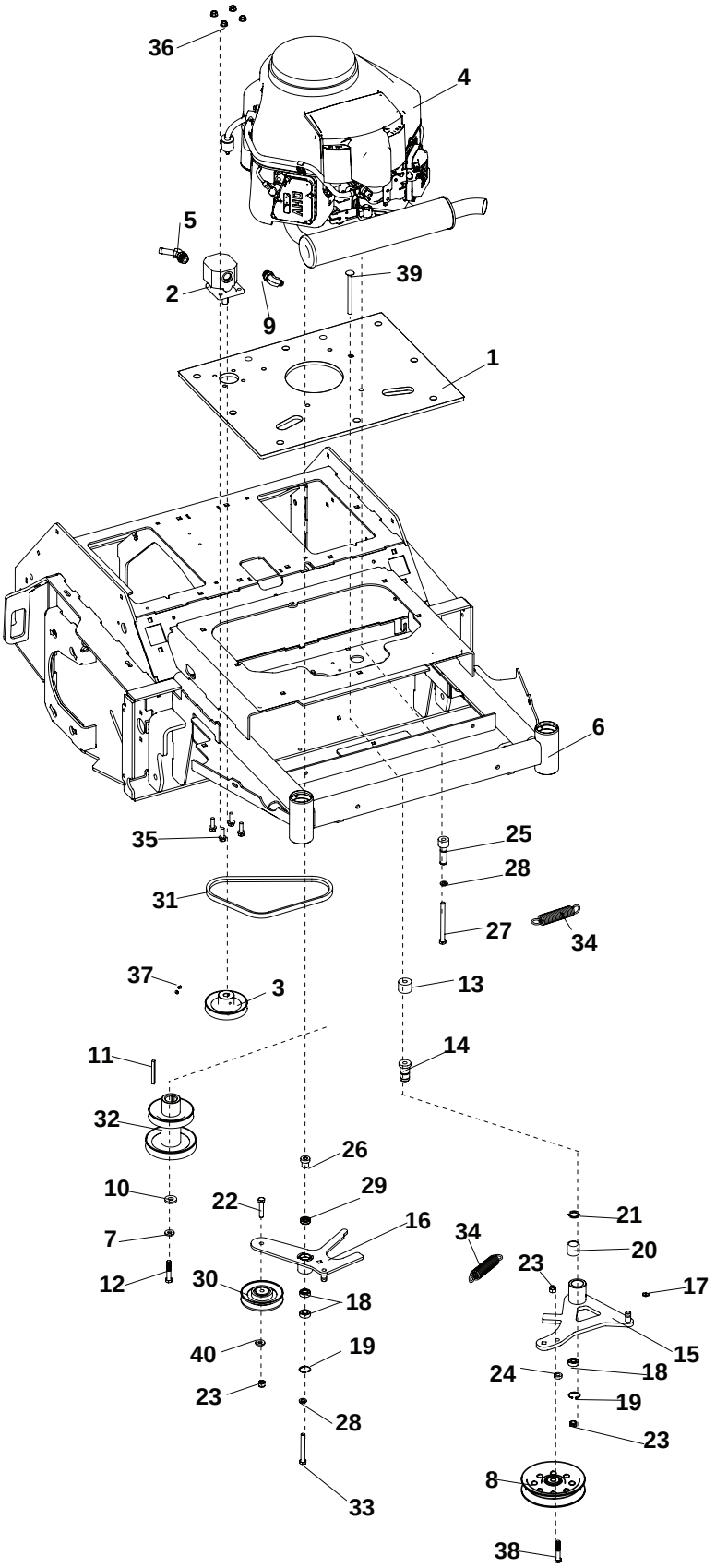
36
4
5
2
9
39
1
6
35
25
28
31
27
34
37
3
13
11
14
32
26
10
22
29
16
21
7
34
20
12
30
23
17
18
15
40
19
24
18
23
19
28
23
8
33
38

LOWER ENGINE ASSEMBLY

FIGURE 2

ITEM	PART NO.	DESCRIPTION	QTY
1	4171512.7	PLT-ENGINE MOUNTING	1
2	4171302	PUMP-GEAR 2.1XCC	1
3	4171447	PULLEY-4 IN	1
4	4164382	ENGINE-KAW FS541V ES	1
5	2690030-03	FTG-3/4-16 ORB X 1/2 BARB	1
6	4173494	S-MAIN FRAME	1
7	64006-06	LOCKWSHR-7/16 HELICAL	1
8	2308000	PULLEY-IDLER 4.00 EOD	1
9	25-2503-8-6	FITTING 90 -8 MORB X -6 MJIC	1
10	64163-51	WSHR.453X1.38X7GA	1
11	64164-38	KEY 1/4 X 3-1/2 SQ	1
12	64123-155	BLT-HEX 7/16-20X3	1
13	4172467	SPACER-IDLER ARM	1
14	4116661	PIN-PIVOT	1
15	4171402	S-IDLER ARM, TRANS	1
	(INCLUDES ITEMS 17-21)		
16	4171398	S-IDLER ARM, PUMP	1
	(INCLUDES 18, 19, 29)		
17	85010N	ZERK 1/4-28 STR SELF THRD	1
18	4128004	BEARING-BALL 10 X 26 X 8	3
19	64144-40	SNAP RING-26MM INTERNAL	2
20	548138	BRG NDL.88 1.12 1.00	1
21	521438	GREASE SEAL	1
22	64123-87	BLT-HEX 3/8-16 X 1-3/4	1
23	64229-03	NUT-NYLON LOCK 3/8-16	3
24	33148-01	SPACER-0.379X0.750X0.25	1
25	4171403	PIN - SPRING	1
26	4171399	PIN - MNTING, PUMP IDLER	1
27	64123-217	BLT-HEX 3/8-16X4-1/4	1
28	64006-03	LOCKWSHR-3/8 HELICAL	2
29	4127999	SEAL-16 X 24 X 7	1
30	48393	PULLEY-V IDLER	1
31	4171469	BELT-HA 30 ED	1
32	4171450	PULLEY-4 IN 'A'	1
33	64123-75	BLT-HEX 3/8-16 X 3	1
34	4163586	SPRING-EXTENSION	2
35	64262-007	BLT-FLG HD 5/16-18 X 1	4
36	64141-6	NUT-WLF 5/16-18	4
37	64044-1	SCREW-SET 1/4-20X1/4	2
38	64123-67	BLT-HEX 3/8-16 X 2	1
39	64018-30	BLT-CRG 3/8-16 X 4-1/2	1
40	64163-69	WSHR .391X.88X10 GA	1

ITEM	PART NO.	DESCRIPTION	QTY

***NOT ILLUSTRATED**

FIGURE 3

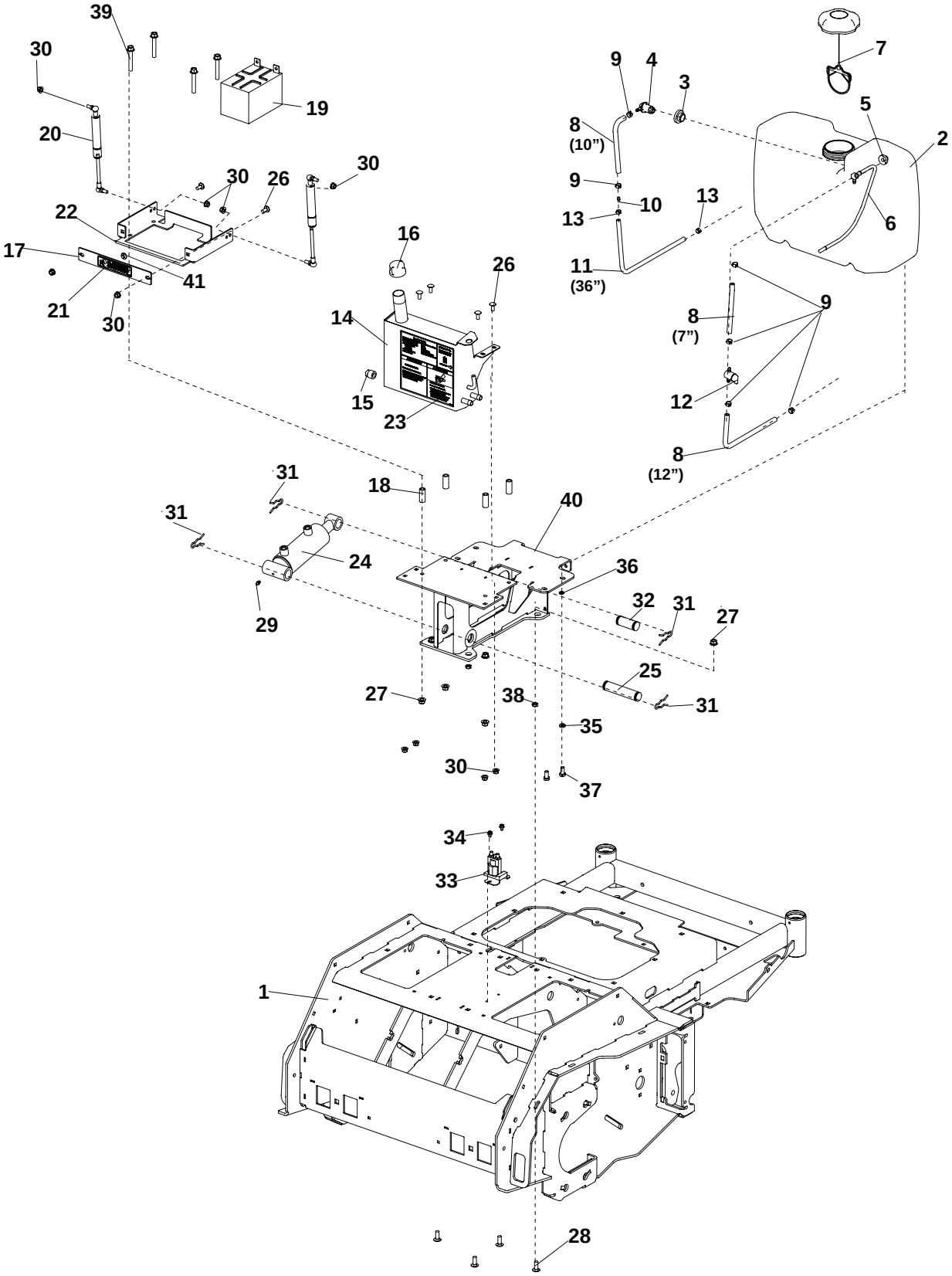
39
30
20
19
30
26
30
22
17
41
21
30
16
26
14
15
23
9
4
3
7
8
(10")
5
2
9
10
13
13
6
11
(36")
8
(7")
9
12
8
(12")
31
18
40
31
24
36
29
32
31
27
25
27
38
31
35
30
37
34
33
1
28

FUEL TANK, BATTERY, RESERVOIR

FIGURE 3

ITEM	PART NO.	DESCRIPTION	QTY
1	4173494	S-MAIN FRAME	2
2	4165561-1	TANK-FUEL, MIDSIZE	1
	(INCLUDES ITEMS 5-7)		
3	4165387	GROMMET, ROLL-OVER	1
4	4165763	TANK VENT	1
5	4132325	GROMMET-SEALING	1
6	4165561-2	TUBE-FUEL, PICK-UP	1
7	4167989	CAP-FUEL, 3.5IN EPA	1
8	4162977-001	HOSE-FUEL 1/4 INCH	3
9	88042N	CLAMP-HOSE	6
10	4165864	FITTING, 1/4 TO 3/16	1
11	4162989-001	HOSE-FUEL 3/16 INCH	1
12	4163016	VALVE- IN-LINE FUEL	1
13	88042-01	CLAMP-HOSE 3/16	2
14	4173495	S-RESERVOIR	1
	(INCLUDES ITEMS 15,16, & 23)		
15	108029	PLUG MAGNETIC	1
16	4171557-3	CAP-1" NPT W/VENT HOLES	1
17	4173496	S-PLATE BATTERY, CLAMP	1
18	2183071-04	SPACER	4
19	4171099	BATTERY-190CCA	1
20	2228065	DAMPER-NON-CAVITATING	2
21	2000590	LABEL-WARN BATTERY	1
22	4171533.7	PLT-BATTERY HOLDER	1
23	4172910	LABEL-RESERVOIR	1
24	4171281	CYLINDER-2.25 X 3.0	1
25	4171592	PIN-CYLINDER	1
26	64018-51	BLT-CRG 5/16-18 X 3/4 SN	6
27	64268-03	NUT-FL NYLON LOCK 3/8-16	8
28	64018-44	BLT-CRG 3/8-16X1 SN	4
29	85010N	ZERK 1/4-28 STR STH	1
30	64268-02	NUT-FL NYLON LOCK 5/16-18	10
31	548602	PIN-HAIR	4
32	548603	PIN-CLEVIS	1
33	38665	SOLENOID	1
34	64152-23	SCREW-SP 1/4-20X3/8	2
35	64123-15	BLT-HEX 3/8-16X3/4	4
36	64006-03	LOCKWSHR-3/8 HELICAL	4
37	64163-31	WSHR 25/64X1X12	4
38	64001-6	NUT-HEX JAM 3/8-16	4
39	64262-025	BLT-FLG HD 3/8-16 X 2-1/2 LG	4
40	4172659.7	WLDMT-BATTERY SUPPORT	1
41	4171586	BUMPER-RUBBER	1

***NOT ILLUSTRATED**

ITEM	PART NO.	DESCRIPTION	QTY

FIGURE 4

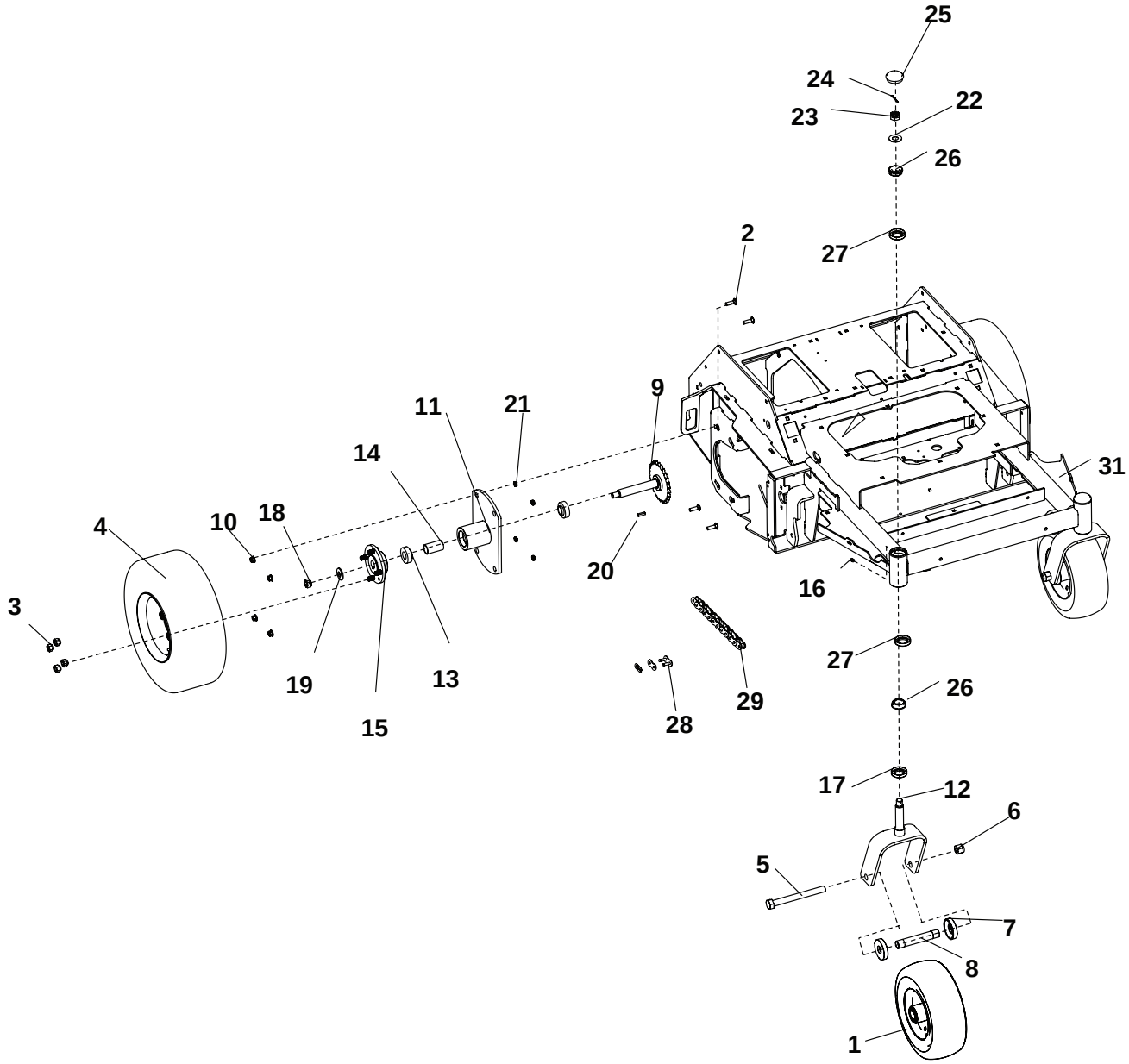
25
24
22
23
26
2
27
9
11
21
14
31
4
10
18
20
16
3
19
13
27
29
26
15
28
17
12
6
5
7
8
1

FIGURE 4

ITEM	PART NO.	DESCRIPTION	QTY
1	2722228	ASSY-WHEEL 13X5.00-6	2
2	64018-7	BLT-CRG 3/8-16X1-1/4	8
3	64187-03	NUT-WHEEL 1/2-20	8
4	4171799	ASSY-WHEEL 18X6.50-8	2
5	64123-215	BLT-HEX 3/4-10X7-1/2	2
6	64229-07	NUT-NYLON LOCK 3/4-10	2
7	2722231	SPACER-END	4
8	2722230-02	SPANNER	2
9	4173176	WLDMT-AXLE SHAFT	2
10	64268-03	NUT-FL NYLON LOCK 3/8-16	8
11	4171458.7	WLDMT-WHEEL SPINDLE HOUS	2
12	2721306.7	CASTER YOKE	2
13	4167554-01	BEARING-SPINDLE SEALED	4
14	4172715	SPACER-SPINDLE	2
15	4171467.7	WLDMT-WHEEL HUB	2
16	85010N	ZERK 1/4-28 STR SLF THRD	2
17	48480	SEAL CR 12411	2
18	64151-28	NUT-HEX 5/8-18 CTR LOCK	2
19	64209-03	SPRING WASHER.67 ID	2
20	64164-12	KEY-1/4X1 SQ	2
21	64001-6	NUT-HEX JAM 3/8-16	8
22	64163-26	WSHR .766 ID X 1.625	2
23	64025-20	NUT-HEX 3/4-16 SLOT U	2
24	64140-9	COTTER PIN-1/4-2	2
25	4162986	CAP-END	2
26	48043-04C	CONE-OUTER BEARING	4
27	48043-03C	CUP-OUTER BEARING	4
28	4172865	LINK-CONNECTOR #50	2
29	4172864-03	CHAIN-50 ROLLER 67 PITCH	2
30*	4173503	KIT-CHAINS REPLACEMENT	1
(INCLUDES ALL 6 CHAINS FOR UNIT AND LINKS)			
31	4173494	S-FRAME, MAIN	1
	(INCLUDES ITEM 27)		

***NOT ILLUSTRATED**

ITEM	PART NO.	DESCRIPTION	QTY

FIGURE 5

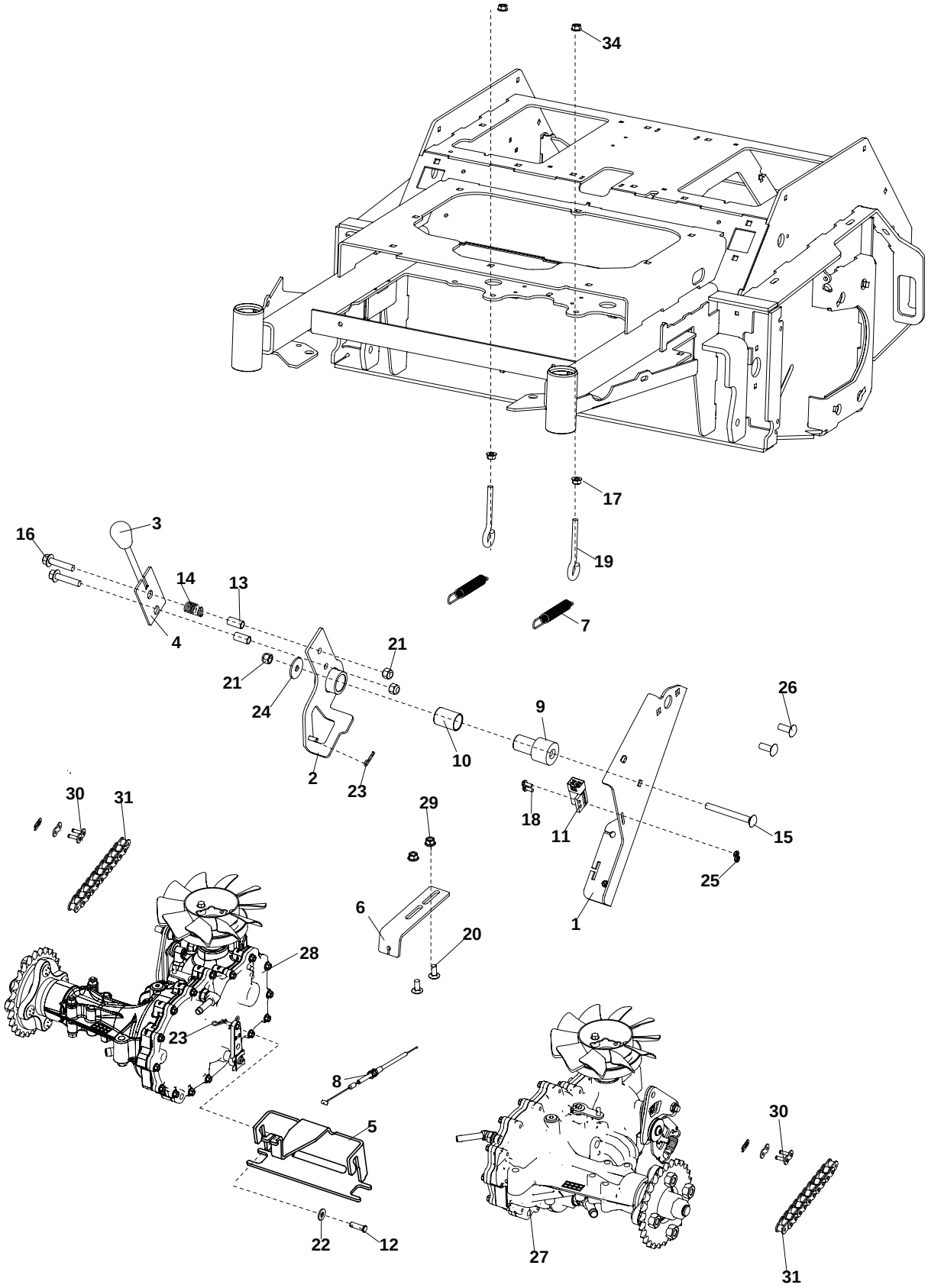
34
17
19
7
3
16
14
13
4
21
21
24
2
23
10
9
26
18
11
15
25
1
30
31
29
6
20
28
23
8
5
22
12
27
30
31

PARKING BRAKE ASSY

FIGURE 5

ITEM	PART NO.	DESCRIPTION	QTY
1	4171573.7	BRKT-BRAKE MOUNT	1
2	4173512	S-BRAKE ARM BRAKT	1
	(INCLUDES ITEM 10)		
3	4168180	KNOB-PUSH ON	1
4	4171580	WLDMT-BRAKE HANDLE	1
5	4173527.7	BRKT-BRAKE, PARKING	1
6	4171582.7	BRKT-CABLE	1
7	4117212	SPRING-EXTENSION	2
8	4171770	CABLE-BRAKE, PARKING	1
9	4171581	HUB-BRAKE PIVOT	1
10	4166324-03	BEARING-PLASTIC 1.000 ID	1
11	2308094	SWITCH-NCNC DBL POLE	1
12	64188-02	PIN-CLEVIS 5/16 X 1	2
13	516544	BUSHING (PLATING)	2
14	41-053	SPRING COMP .681 X 1.125	1
15	64018-55	BLT-CRG 3/8-16X3-1/2	1
16	64262-018	BLT-FLG HD 3/8-16 X 1-3/4	2
17	64141-4	NUT-WLF 3/8-16	4
18	64152-46	SCREW-SLT HH 10-24X1/2	2
19	4113682	ROD-SPRING MOUNT	2
20	64018-51	BLT-CRG 5/16-18 X 3/4 SN	2
21	64229-03	NUT-NYLON LOCK 3/8-16	3
22	64163-55	WSHR .328X.75X14 GA	2
23	64168-2	COTTER-HAIRPIN .08 X 1.19	3
24	64163-87	WSHR- .391x1.375x12GA	1
25	64025-15	NUT-HEX #10-24 KEPS	2
26	64018-7	BLT-CRG 3/8-16X1-1/4	2
27	4171282	TRANSAXLE, HYDROSTATIC LH	1
28	4171283	TRANSAXLE, HYDROSTATIC RH	1
29	64268-02	NUT-FL NYLON LOCK 5/16-18	2
30	4172865	LINK-CONNECTOR #50	2
31	4172864-01	CHAIN 50 ROLLER 57 PITCH	2
32*	4173503	KIT-CHAINS REPLACEMENT	1
(INCLUDES ALL 6 CHAINS FOR UNIT AND LINKS)			

*NOT ILLUSTRATED

ITEM	PART NO.	DESCRIPTION	QTY

FIGURE 6

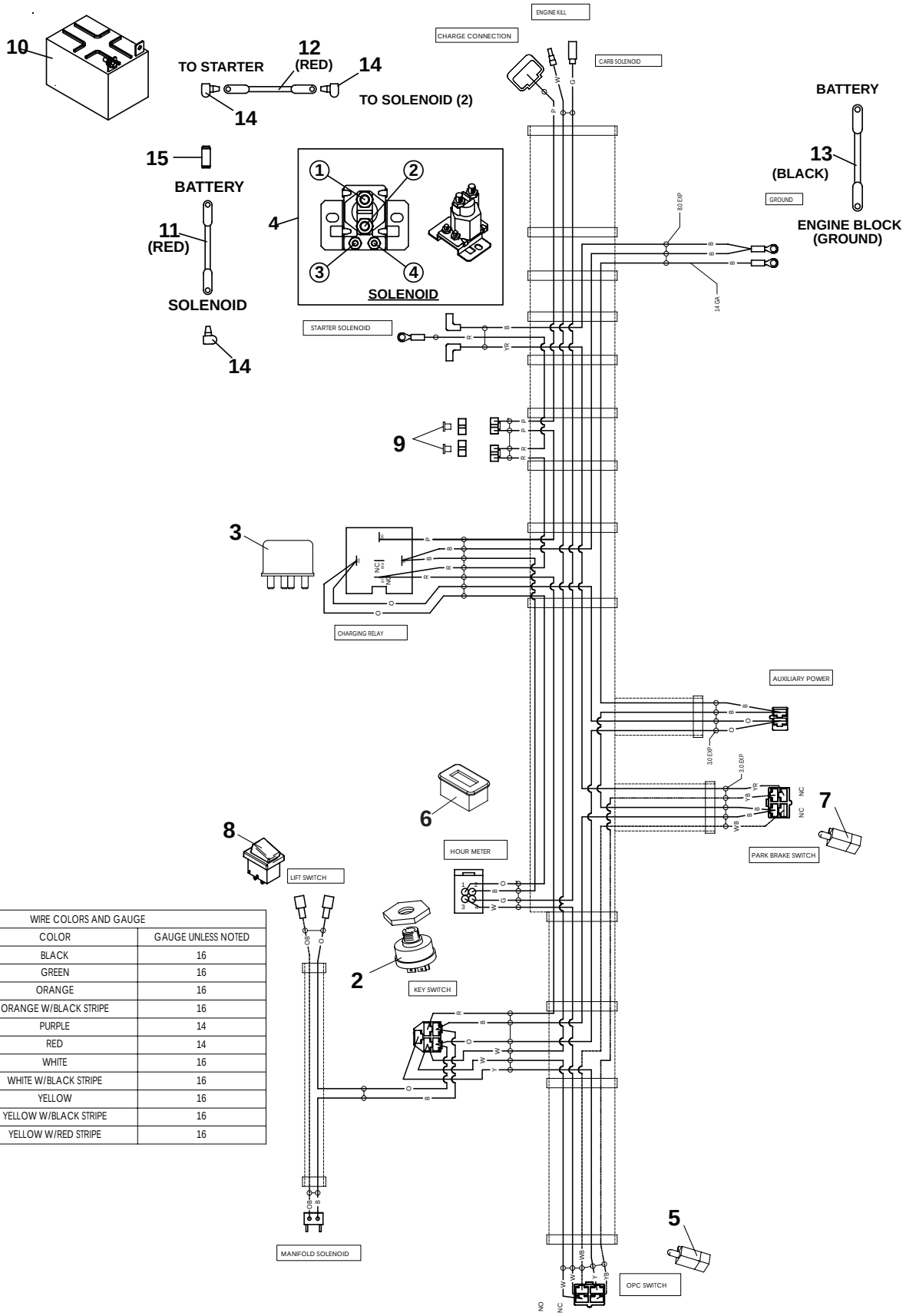

WIRE COLORS AND GAUGE		
CODE	COLOR	GAUGE UNLESS NOTED
B	BLACK	16
G	GREEN	16
O	ORANGE	16
OB	ORANGE W/BLACK STRIPE	16
P	PURPLE	14
R	RED	14
W	WHITE	16
WB	WHITE W/BLACK STRIPE	16
Y	YELLOW	16
YB	YELLOW W/BLACK STRIPE	16
YR	YELLOW W/RED STRIPE	16

FIGURE 6

ITEM	PART NO.	DESCRIPTION	QTY
1	4172161	HARNESS-WIRING MAIN	1
	(INCLUDES ITEM 9)		
2	128010	KEY-SWITCH	1
3	2722325	RELAY-40AMP SEALED	1
4	38665	SOLENOID	1
5	108208	SWITCH-DBL POLE	1
6	4171992	METER-HOUR	1
7	2308094	SWITCH NCNC	1
8	4171893	SWITCH-ROCKER	1
9	148082-20	FUSE-20 AMP	2
10	4171099	BATTERY-AGM TYPE	1
	4171973	CHARGER-AGM	
11	2722227-05	CABLE-BATTERY 18" COND	1
	(INCLUDES ITEM 14 & 15)		
12	108061-17	CABLE-BATTERY 16 RED	1
13	108061-16	CABLE-BATTERY 31.5 BLK	1
14	2308095	COVER - TERMINAL	3
15	112386	BOOT BAT TERM POS	1

ITEM	PART NO.	DESCRIPTION	QTY

RYAN

FIGURE 7

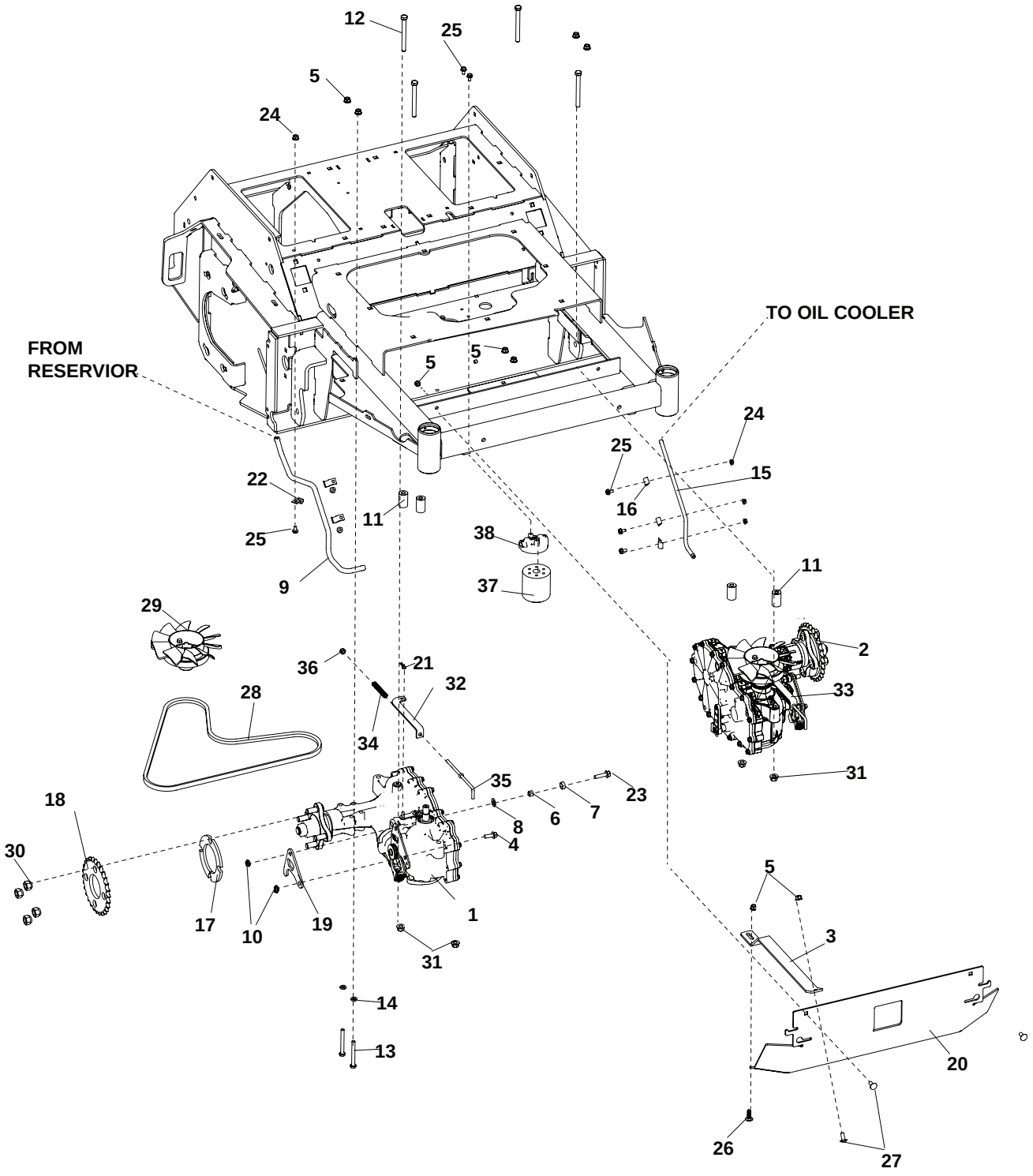
12
25
5
24
TO OIL COOLER
FROM
RESERVIOR
5
5
24
25
15
22
16
11
25
38
9
37
11
29
2
36
21
32
33
28
34
31
35
23
18
8
6
7
30
4
5
1
17
10
19
3
31
14
13
20
26
27

TRANSAXLE ASSEMBLY

FIGURE 7

ITEM	PART NO.	DESCRIPTION	QTY
1	4171283	TRANSAXLE, HYDROSTATIC RH	1
2	4171282	TRANSAXLE, HYDROSTATIC LH	1
3	4172890.7	BRKT-SHIELD SUPPORT	1
4	64262-011	BLT-FLG HD 3/8-16 X 1	2
5	64268-02	NUT-FL NYLON LOCK 5/16-18	8
6	518438	BUSHING	2
7	4169194	BUSHING - .522 X ..688 X .289	2
8	64163-61	WSHR .81X.406X16GA	2
9	4172705	TUBE RESERVOIR-FILTER	1
10	64229-03	NUT-NYLON LOCK, 3/8-16	4
11	33030-4A	IDLER BUSHING	4
12	64123-138	BLT-HEX 3/8-16 X 3-3/4	4
13	64123-104	BLT-HEX 5/16-18X2-3/4	4
14	64163-02	WSHR .321/.328X.593/.608X11GA	4
15	4172704	TUBE-TRANS - COOLER	1
16	G8062	CLAMP HALF 3/8 INSULATED	3
17	4172456.7	PLATE-SPACER	2
18	4172523	SPROCKET - #50-28, TRANS	2
19	4171487.7	PLATE-TRANS ACTUATOR	2
20	4171666.7	PLT-DUMP VALVE	1
21	64168-2	COTTER-HAIRPIN .08 X 1.19	2
22	4171606-1	CLAMP-HALF 1/2 HOSE	3
23	64262-012	BLT-FLG HD 3/8-16 X 1-1/4	2
24	64141-2	NUT-WLF 1/4-20	6
25	64139-02	BLT-WLF 1/4-20X1/2	8
26	64018-15	BLT-CRG 5/16-18X1 SN	1
27	64018-51	BLT-CRG 5/16-18 X 3/4 SN	5
28	4172459	BELT-HA 54.80	1
29	4164048	KIT-TRANSAXLE, FAN & PULLEY	2
30	64187-03	NUT-WHEEL 1/2-20	8
31	64268-03	NUT-FL NYLON LOCK 3/8-16	4
32	4171665.7	LINK-DUMP VALVE, RH	1
33	4171664.7	LINK-DUMP VALVE, LH	1
34	2720977	SPRING-COMPRESSION	2
35	4148697	ROD-PULL FREEWHEEL	2
36	64229-01	NUT-NYLON LOCK 1/4-20	2
37	2720396	FILTER-25 MICRON SMALL CAN	1
38	138059	FILTER HEAD	1

ITEM	PART NO.	DESCRIPTION	QTY

OIL COOLING SYSTEM

FIGURE 8

LAWNAIRE ZTS

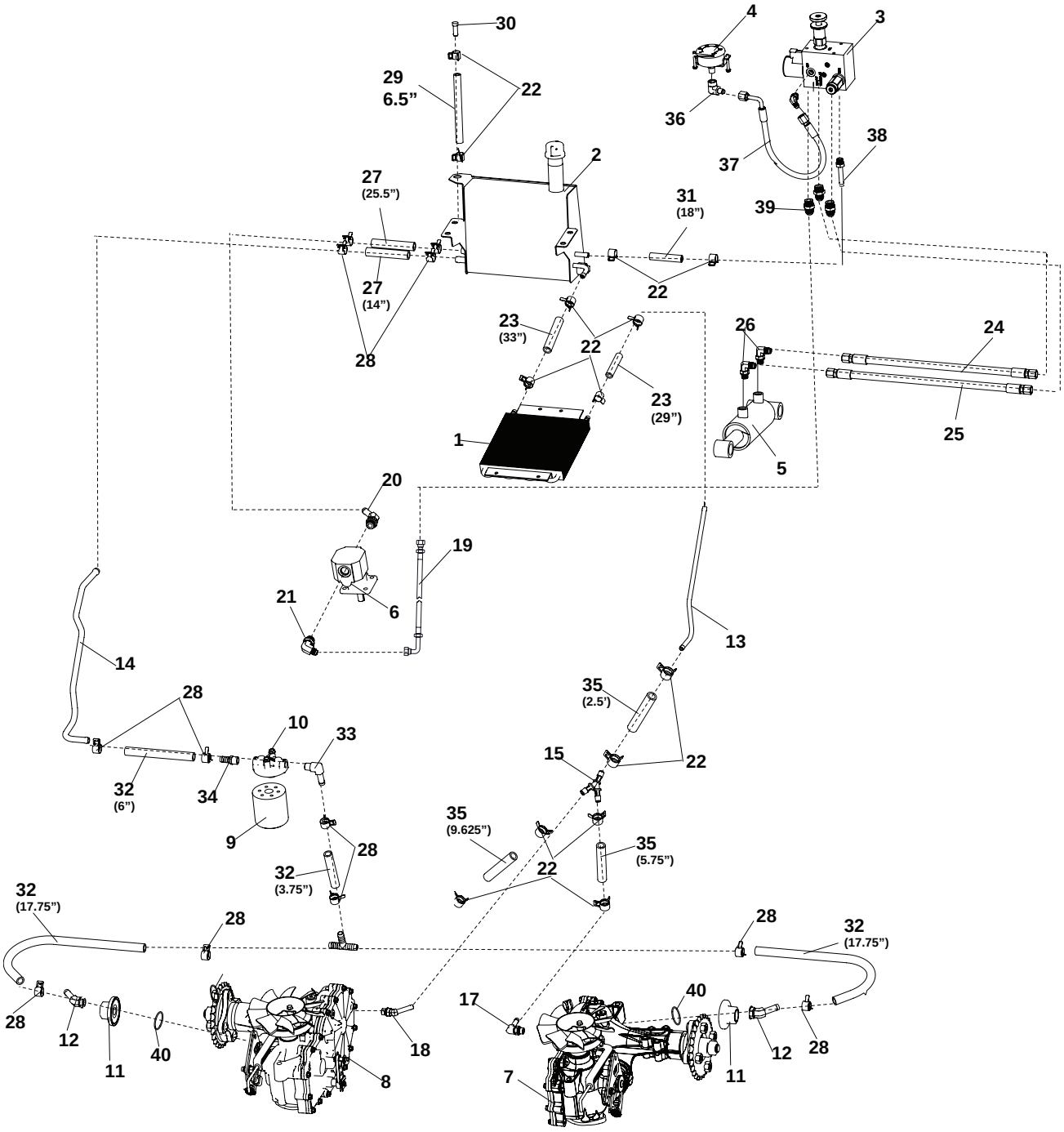

OIL COOLING SYSTEM

FIGURE 8

ITEM	PART NO.	DESCRIPTION	QTY
1	2188173	COOLER-OIL	1
2	4173495	S-RESERVOIR	1
3	4171280	MANIFOLD-AERATOR	1
4	4171284	GAUGE-HYDRAULIC 0-1000 PSI	1
5	4171281	CYLINDER-2.25 X 3.0	1
6	4171302	PUMP-GEAR 2.1XCC	1
7	4171282	TRANSAXLE, HYDROSTATIC LH	1
8	4171283	TRANSAXLE, HYDROSTATIC RH	1
9	2720396	FILTER-25 MICRON SMALL CAN	1
10	138059	FILTER HEAD	1
11	4172699	FTG -06 MORB X 3/8 HOSE 90	1
12	2690030-03	FTG-3/4-16 ORB X 1/2 BARB 45	2
13	4172704	TUBE-TRANS - COOLER	1
14	4172705	TUBE RESERVOIR-FILTER	1
15	4172860	FTG-3/8 Y HOSE CONNECTOR	1
16	58026-04	CONNECTOR-3 WAY, 1/2"	1
17	158058-04	FTG -06 MORB X 3/8 HOSE 90	1
18	2690030-01	FITTING-9/16-18 ORB X 3/8	1
19	4166840-03	HOSE-#6 JIC/90 JIC X 39.75	1
20	2690030-03	FTG-3/4-16 ORB X 1/2 BARB	1
21	25-2503-8-6	FITTING-90 -9 MORB X -6 MJIC	1
22	88042-04	CLAMP, HOSE	14
23	69053-05	HOSE-HYD (9" L)	4
24	4166839-03	HOSE-#6 JIC/JIC 19.5	1
25	4166839-02	HOSE-#6 JIC/JIC 18.5	1
26	25-2503-6-6	FITTING 90 -6 MORB X -6 MJIC	2
27	138058-09	HOSE-BULK .50ID X .84 OD	2
28	88042-05	CLAMP-HOSE 13/16	12
29	4172859-03	HOSE- 3/8 ID X 5/8 OD CLEAR	1
30	4173002	VENT-BREATHER	1
31	69053-05	HOSE-HYD (9" L)	1
32	138058-09	HOSE-BULK.50IDX.84OD	4
33	108086-03	FTG-BARB 90-1/2 X 3/8 MNPT	1
34	4164252-002	FITTING-3/8MNPT X 1/2M BARB	1
35	69053-05	HOSE-HYDRO	3
36	25-2502-4-4	FTG 90 -4 MJIC X -4 FPT	1
37	4172326-01	HOSE-#4JIC/JIC 90 LG 17.38	1
38	69060-01	FITTING-ORB X 45 BARB	1
39	25-0503-6-6	FITTING STR -6 M ORB/-6 MJIC	3
40	158061-32	O-RING #228 BUNA	2

*NOT ILLUSTRATED

ITEM	PART NO.	DESCRIPTION	QTY

FIGURE 9

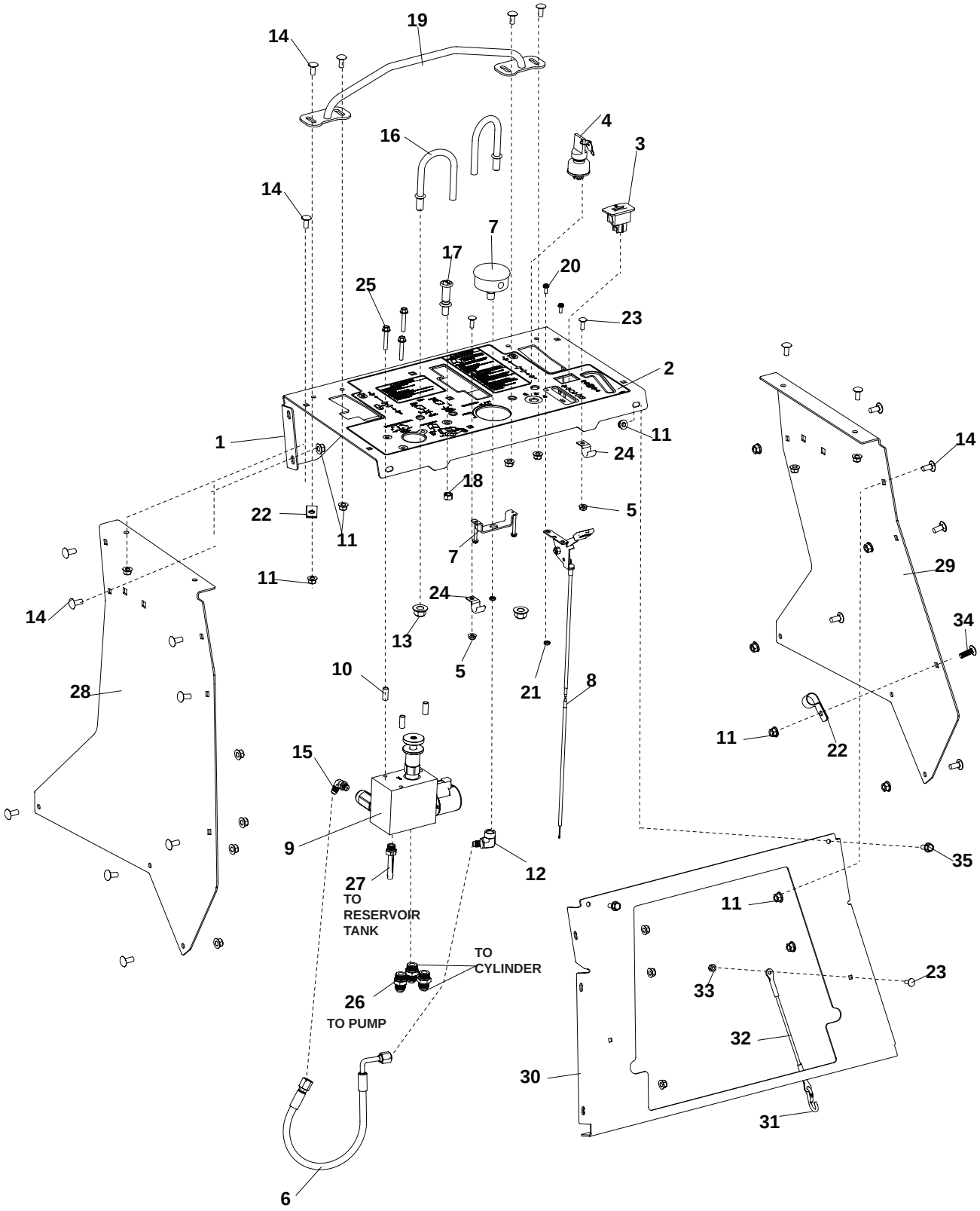
14
19
16
4
3
14
7
17
20
25
23
2
1
11
24
18
22
5
11
7
11
29
24
14
34
13
5
10
21
8
28
11
22
15
9
35
12
27
TO
RESERVOIR
TANK
11
TO
CYLINDER
23
33
26
TO PUMP
32
30
31
6

CONTROL PANEL & TOWER ASSY

FIGURE 9

ITEM	PART NO.	DESCRIPTION	QTY
1	4173497	S-CONTROL PANEL	1
2	4172858	LABEL-CONTROL PANEL	1
3	4171992	HOUR METER-MAG SENSE	1
4	128010	SWITCH KEY	1
5	64141-2	NUT-WLF 1/4-20	2
6	4172326-01	HOSE-#4JIC/JIC 90 LG 17.38	1
7	4171284	GAUGE-HYDRAULIC 0-1000 PSI	1
8	118020-22	CONTROL-THROTTLE, 57.5IN	1
9	4171280	MANIFOLD-AERATOR	1
10	820529	SPACER	3
11	64268-02	NUT-FL NYLON LOCK 5/16-18	21
12	25-2502-4-4	FTG 90 -4 MJIC X -4 FPT	1
13	64268-05	NUT-FL NYLON LOCK 1/2-13	2
14	64018-51	BLT-CRG 5/16-18 X 3/4 SN	17
15	25-2503-4-4	FITTING-ORB X 45 BARB	1
16	4171511	BAR-REFERENCE REVERSE	2
17	108009-03	CONTROL-CHOKE 51	1
18	64025-04	NUT-3/8-24 HEX	1
19	4170593.7	WLDMT-FRONT POINT	1
20	64152-46	SCREW-SLT HH 10-24X1/2	2
21	64025-15	NUT-HEX #10-24 KEPS	2
22	48228-2A	CLAMP-3/4 CLIP	2
23	64018-2	BLT-CRG 1/4-20X3/4	3
24	4171606-1	CLAMP-HALF, 5/8 HOSE	2
25	64262-005	BLT-FLG 1/4-20 X 1-1/2	3
26	25-0503-6-6	FITTING STR -6 M ORB/-6 MJIC	3
27	69060-01	FITTING-ORB X 45 BARB	1
28	4173498	S-PANEL,TOWER LH	1
29	4173499	S-PANEL,TOWER RH	1
30	4171495.2	PANEL-BACK	1
31	4172866	SNAP-SPRING 3/16	1
32	4171100	TETHER-WIRE, COATED	1
33	64229-01	NUT-NYLON LOCK 1/4-20	1
34	64018-15	BLT-CRG 5/16-18X1 SN	1
35	64262-006	BLT-FLG HD 5/16-18 X 3/4	2

*NOT ILLUSTRATED

ITEM	PART NO.	DESCRIPTION	QTY

FIGURE 10

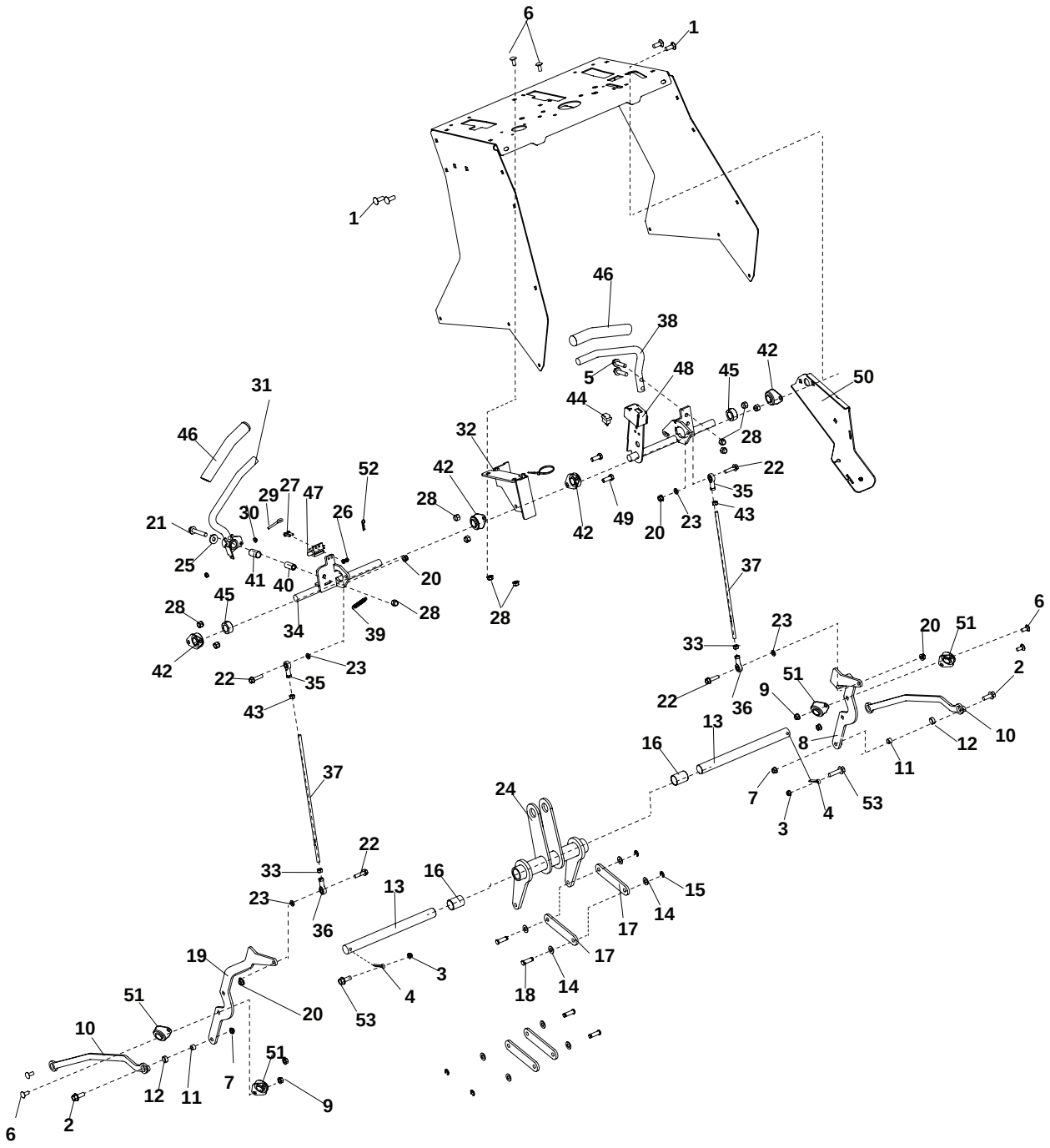
6
1
1
46
38
42
5
48
45
50
44
31
28
46
32
22
52
42
35
29
27
47
28
43
30
26
49
21
42
20
23
25
41
40
20
37
45
28
28
28
34
39
6
23
20
51
33
42
22
23
35
2
51
9
22
36
43
13
10
16
8
12
11
37
24
7
53
4
3
22
33
16
15
13
23
14
36
17
17
19
3
51
4
18
14
20
53
10
51
7
12
11
9
6
2

FIGURE 10

ITEM	PART NO.	DESCRIPTION	QTY
1	64018-44	BLT-CRG 3/8-16X1 SN	4
2	64262-012	BLT-FLG HD 3/8-16 X 1-1/4	2
3	64268-01	NUT-FL NYLON LOCK 1/4-20	2
4	64140-18	COTTER PIN-1/4-2	2
5	64262-013	BLT-FLG HD 3/8-16 X 1-1/2	2
6	64018-51	BLT-CRG 5/16-18 X 3/4 SN	6
7	64229-03	NUT-NYLON LOCK, 3/8-16 JAM	2
8	4171478.7	ARM-LINK, RH	1
9	64141-6	NUT-WLF 5/16-18	4
10	4171476.7	LINK-TRANSAXLE	2
11	518438	BUSHING	2
12	4169194	BUSHING - .522 X ..688 X .289	2
13	4171388	SHAFT-LIFT PIVOT	2
14	64163-61	WSHR .81X.406X16GA	8
15	64221-07	E-RING, 3/8"	4
16	4166324-03	BEARING-PLASTIC 1.000 ID	2
17	4171416.7	LINK-LIFT	4
18	33138-07	PIN CLEVIS GRVD .38 X 1.25	4
19	4171479.7	ARM-LINK, RH	1
20	64268-02	NUT-FL NYLON LOCK 5/16-18	6
21	64262-027	BLT-FLG HD 3/8-16 X 2-1/4 GR8	1
22	64262-008	BLT-FLG HD 5/16-18 X 1-1/4	4
23	64163-02	WSHR .328X608X11GA	4
24	4171433.7	WLDMT-LIFT PIVOT	1
25	64163-31	WSHR 25/64X1X12	1
26	64025-15	NUT-HEX #10-24 KEPS	2
27	64152-49	SCREW-SLT HH 10-24X1.25	2
28	64229-03	NUT-NYLON LOCK 3/8-16	11
29	64158-01	EYE BOLT-10-24 X 1.25 THD LG	1
30	64141-15	NUT-WLF 10-24	2
31	4171442	HANDLE-CNTRL OP PRESENCE	1
32	4171515.7	BRKT-CONTROL LEVER	1
33	64025-03	NUT-HEX 5/16-24	2
34	4171520.7	BAR-CONTROL	1
35	4143595-02	ROD END-FEMALE 5/16-24 LH	2
36	4143595-01	ROD END-FEMALE	2
37	4171475	ROD-CONTROL	2
38	4171171	HANDLE-CONTROL,STATIONARY	1
39	4171461	SPRING-EXTENSION	1
40	4171409	SPACER-.625 X.386X1.260	1
41	4166324-04	BEARING-PLASTIC .625 X1.25LG	1
42	2188145	BEARING-.75ID BRZ SELF ALIGN	4
43	64025-33	NUT-HEX 5/16-24 LH	2
44	4171893	SWITCH-MINIATURE ROCKER	1
45	85-SC12	SET COLLAR 3/4"	2
46	4172963	GRIP-CONTROL	2
47	108208	SWITCH DBL POLE	1
48	4171523.7	ARM-SWITCH	1
49	64123-50	BLT-HEX 3/8-16X1	2
50	4171573.7	BRKT-BRAKE MOUNT	1
51	4168069	BEARING-FLUSHMNT,1.0 SHAFT	4
52	64168-2	COTTER-HAIRPIN.08X1.19	1
53	64262-003	BLT-FLG HD 1/4-20 X 1	2

ITEM	PART NO.	DESCRIPTION	QTY

FIGURE 11

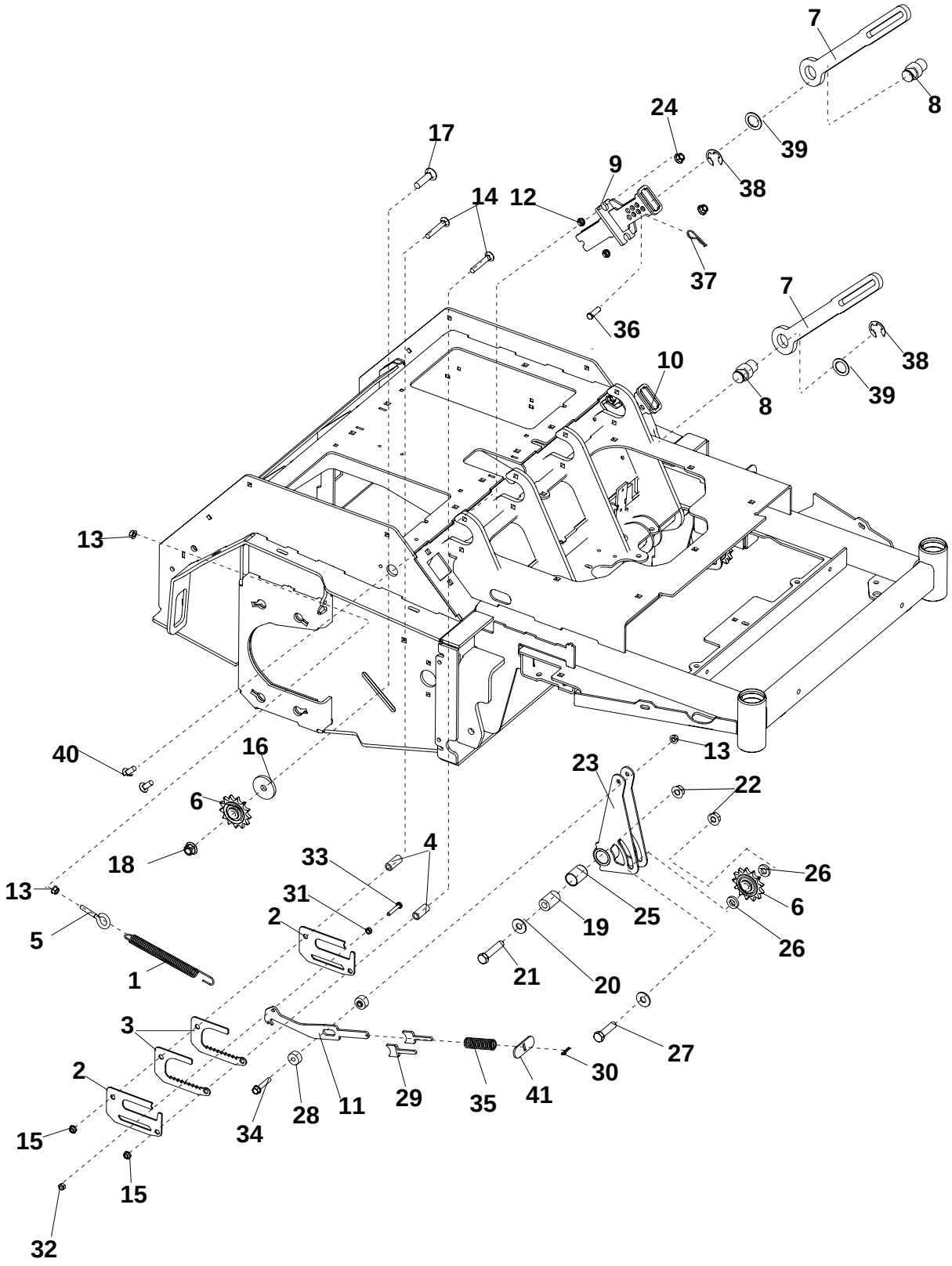
7
8
24
39
17
9
38
14
12
37
7
36
10
38
8
39
13
40
16
13
23
22
6
4
18
33
26
13
31
25
6
2
19
5
26
1
21
20
3
27
30
2
41
29
35
28
11
34
15
15
32

LAWNAIRE ZTS

DEPTH STOP & HOC ASSEMBLY

FIGURE 11

ITEM	PART NO.	DESCRIPTION	QTY
1	4117212	SPRING-EXTENSION	2
2	4172452	PLATE-GUIDE	4
3	4172453	PLATE-LOCK	4
4	2183071-04	SPACER	4
5	4169597	EYE BOLT 5/16-18 X 1.5	2
6	83-5013E08	SPROCKET-WHEEL,FRONT	4
7	4172671	ARM-DEPTH	2
8	4172672	HUB-DEPTH ARM	2
9	4172679.7	WLDMT-DEPTH SET RH	1
10	4172677.7	WLDMT-DEPTH SET LH	1
11	4172454	ARM-IDLER LOCK	2
12	64001-6	NUT-HEX JAM 3/8-16	4
13	64141-6	NUT-WLF 5/16-18	6
14	64018-31	BLT-CRG 3/8-16 X 2-1/2	4
15	64141-4	NUT-WLF, 3/8-16	4
16	64163-74	WASHER: .516 X 2.00 X .250	2
17	64018-13	BLT-CRG 1/2-13X2 GR5	2
18	64268-05	NUT-FL NYLON LOCK 1/2-13	2
19	4168176	TUBE-PIVOT, IDLER INNER	2
20	64163-19	WSHR 33/64X1-1/4X12GA	4
21	64123-72	BLT-HEX 1/2-13X2-1/2	2
22	64141-13	NUT-WLF 1/2-13	4
23	4172457.7	WLDMT-IDLER ARM	2
24	64268-03	NUT-FL NYLON LOCK 3/8-16	4
25	4166324-03	BEARING-PLASTIC 1.000 ID	2
26	64163-36	WSHR 1X33/64X.187	4
27	64123-24	BLT-HEX 1/2-13X2	2
28	4172782	HUB-TENSIONER ARM	4
29	4172783	PLATE-SPRING GUIDE	4
30	64168-2	COTTER-HAIRPIN .08 X 1.19	2
31	64025-01	1/4-20 HEX NUT	2
32	64229-01	NUT-NYLON LOCK 1/4-20	2
33	64123-07	BLT-HEX 1/4-20X1-1/2	2
34	64262-019	BLT-FLG HD 5/16-18 X 1-3/4	2
35	4166927	SPRING COMPRESSION	2
36	64188-68	PIN-CLEVIS 3/8 X 1.25	2
37	64168-7	COTTER-HAIRPIN .091 X 1.88	2
38	64221-1	E-RING, 1"	2
39	64163-64	WSHR 1.015X1.500X14GA	2
40	64018-44	BLT-CRG 3/8-16X1 SN	4
41	4172784	PLT-SPRING STOP	2

ITEM	PART NO.	DESCRIPTION	QTY

*** NOT ILLUSTRATED**

FIGURE 12

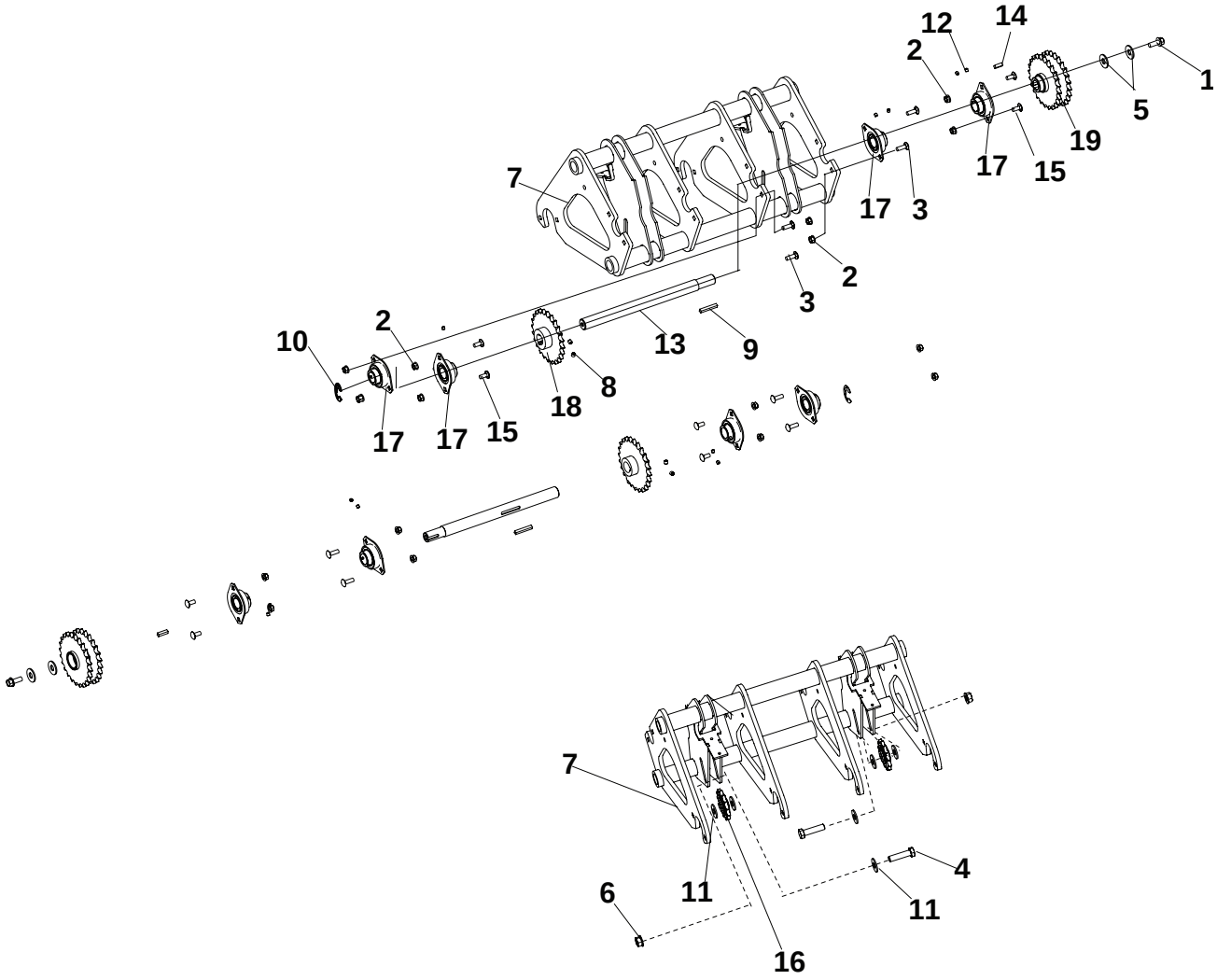

JACKSHAFT ASSEMBLY

FIGURE 12

ITEM	PART NO.	DESCRIPTION	QTY
1	64262-011	BLT-FLG HD 3/8-16 X 1	2
2	64141-6	NUT-WLF 5/16-18	16
3	64018-15	BLT-CRG 5/16-18X1 SN	8
4	64123-24	BLT-HEX 1/2-13X2	2
5	64163-19	WSHR 33/64X1-1/4X12GA	4
6	64141-13	NUT-WLF 1/2-13	2
7	4171394.7	WLDMT-TINE ASSY	1
8	64044-18	SCREW-SET 5/16-18 x 5/16	4
9	64164-40	KEY 1/4 X 1 3/4 SQ	2
10	64163-108	WASHER	2
11	64262-007	BLT-FLG HD 5/16-18 X 1	2
12	64044-13	SCREW-SET 1/4-28X1/4	16
13	4173659	SHAFT - HALF, TINE DRIVE	2
14	64164-12	KEY-1/4X1 SQ	2
15	64018-51	BLT-CRG 5/16-18 X 3/4 SN	8
16	83-5013E08	SPROCKET-WHEEL,FRONT	2
17	4168069	BEARING-1" FLUSHMOUNT	8
	(INCLUDES ITEM 12)		
18	4171445	SPROCKET	2
19	4171359	SPROCKET, DBL	2
20	64163-124	WSHR-.531 X 1.50X 1.25	6

ITEM	PART NO.	DESCRIPTION	QTY

FIGURE 13

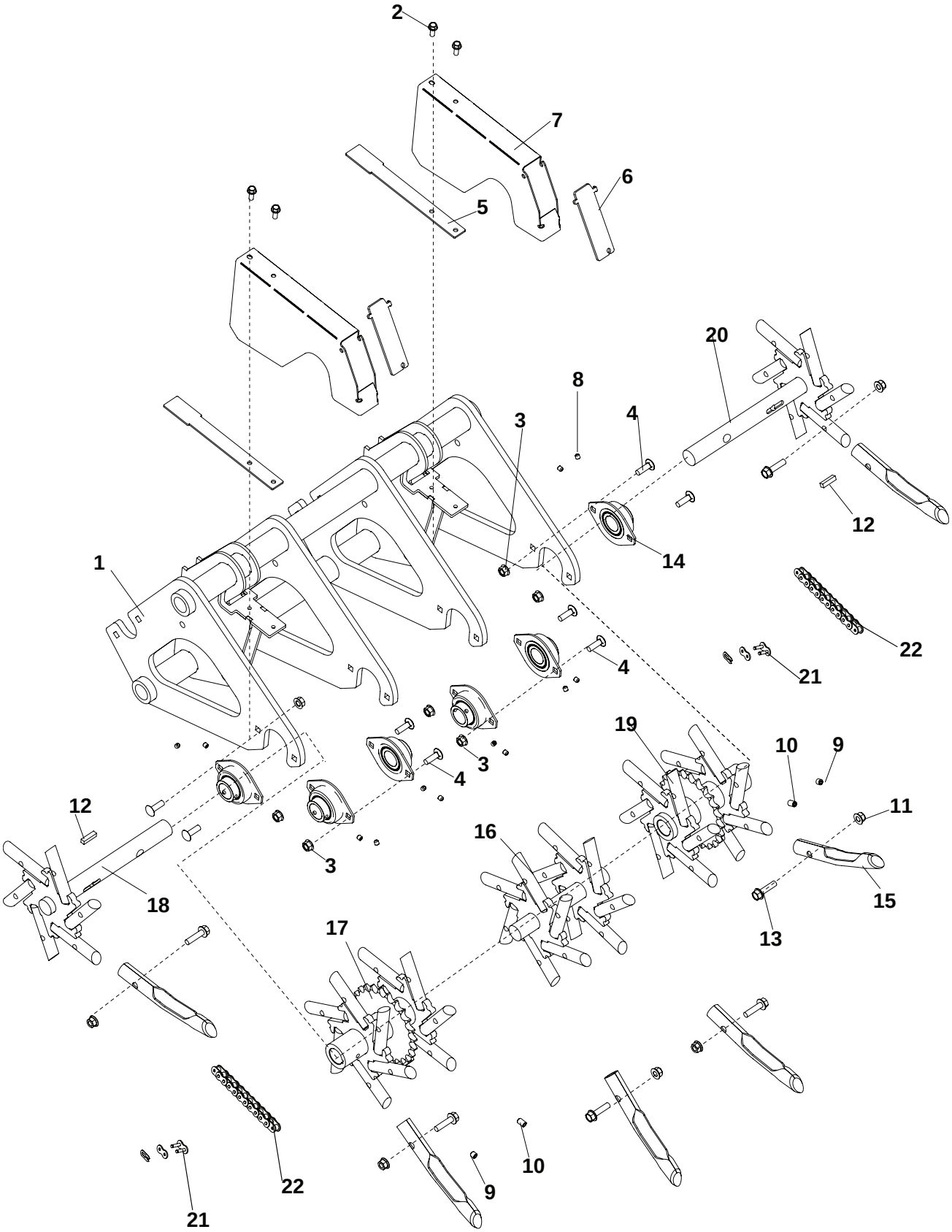

ITEM	PART NO.	DESCRIPTION	QTY
1	4171394.7	WLDMT-TINE ASSY	1
2	64197-025	BLT-TDFM 1/4-20X5/8	4
3	64141-6	NUT-WLF 5/16-18	8
4	64018-15	BLT-CRG 5/16-18X1 SN	8
5	4171363.7	PLATE-CHAIN COVER	2
6	4172290.7	DOOR-CHAIN COVER	2
7	4172291.7	COVER-CHAIN	2
8	64044-13	SCREW-SET 1/4-28X1/4	12
9	64044-18	SCREW-SET 5/16-18 x 5/16	2
10	64044-25	SCREW-SET 5/16-18X1/2	2
11	64268-02	NUT-FL NYLON LOCK 5/16-18	48
12	64164-12	KEY-1/4X1 SQ	2
13	64262-008	BLT-FLG HD 5/16-18 X 1-1/4	48
14	4168069	BEARING-1" FLUSHMOUNT	6
	(INCLUDES ITEM 8)		
15	522361	TINE, CORING 3/4	48
	4173502	KIT-TINE, 48 COUNT	
16	4171338.7	WLDMT-CENTER TINE SHAFT	1
17	4171329.7	WLDMT-TINE SPROCKET LH	1
18	4171321.7	WLDMT-TINE BANK LH	1
19	4171334.7	WLDMT-TINE SPROCKET RH	1
20	4171322.7	WLDMT-TINE BANK RH	1
21	4172865	LINK-CONNECTOR	2
22	4172864-02	CHAIN-50 ROLLER 63 PITCH	2
23*	4173503	KIT-CHAIN	1

(INCLUDES ALL 6 CHAINS FOR UNIT AND LINKS)

*NOT ILLUSTRATED

ITEM	PART NO.	DESCRIPTION	QTY

FIGURE 14

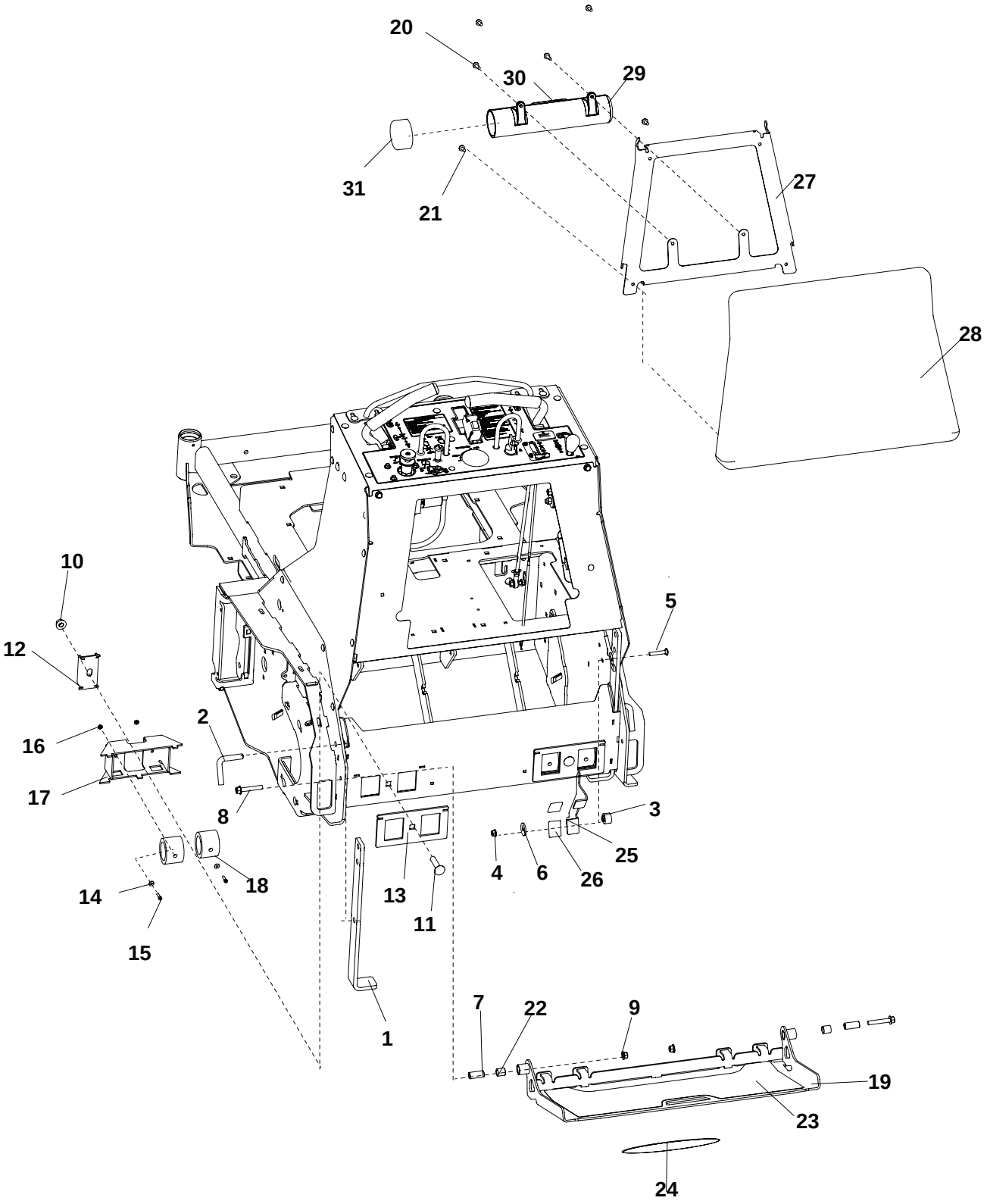
20
30
29
31
21
27
28
10
5
12
2
16
17
8
3
25
4
6
26
18
14
13
11
15
1
7
22
9
19
23
24

ITEM	PART NO.	DESCRIPTION	QTY
1	4172224.2	PLT-JACK	2
2	4172688	PIN-JACK	2
3	4173046	BUSHING-LATCH ARM	1
4	64268-02	NUT-FL NYLON LOCK 5/16-18	1
5	64018-58	BLT-CRG 5/16-18X1-3/4	1
6	64163-108	WSHR-.334 X 1.25 X .125	1
7	4171391	BUSHING-SPACER	2
8	64262-027	BLT-FLG HD 3/8-16 X 2-1/4 GR8	2
9	64268-03	NUT-FL NYLON LOCK 3/8-16	2
10	64141-13	NUT-WLF 1/2-13	2
11	64018-45	BLT-CRG 1/2-13 X 2-1/4	2
12	4172316.7	PLT-PLATFORM BRKT	2
13	4172318.7	BRKT-BUMPER SUPPORT	2
14	64163-86	WSHR- .265 X .625 X .125	4
15	64189-16	BLT-HEX SOC 1/4-20 X 1	4
16	64229--01	NUT-NYLON LOCK 1/4-20	4
17	4172315.7	BRKT-PLATFORM DAMPER	2
18	4170585	BUMPER-RADIAL	4
19	4173514	S- PLATFORM	1
	(INCLUDES ITEMS 22 & 23)		
20	64262-003	BLT-FLG 1/4-20 X 1	2
21	64262-002	BLT-FLG HD 1/4-20 X 3/4	4
22	4166324-06	BEARING-SLEEVE	2
23	4170670	MAT-FOOTPLATE	1
24	4161123	LABEL-RYAN OVAL 9"	1
25	4173037.7	LATCH-PLATFORM	1
26	4171365	CAP-FOOTPLATE LATCH	2
27	4172682.7	BRKT-PAD, SUPPORT	1
28	4171884	PAD-AERATOR STAND ON GRAY	1
29	4160281	S-TUBE,DOCUMENT	1
	(INCLUDES ITEMS 30 & 31)		
30	2000735	LABEL-OPER MAN	1
31	38061A	CAPS VINYL	1

***NOT ILLUSTRATED**

ITEM	PART NO.	DESCRIPTION	QTY

RYAN

FIGURE 15

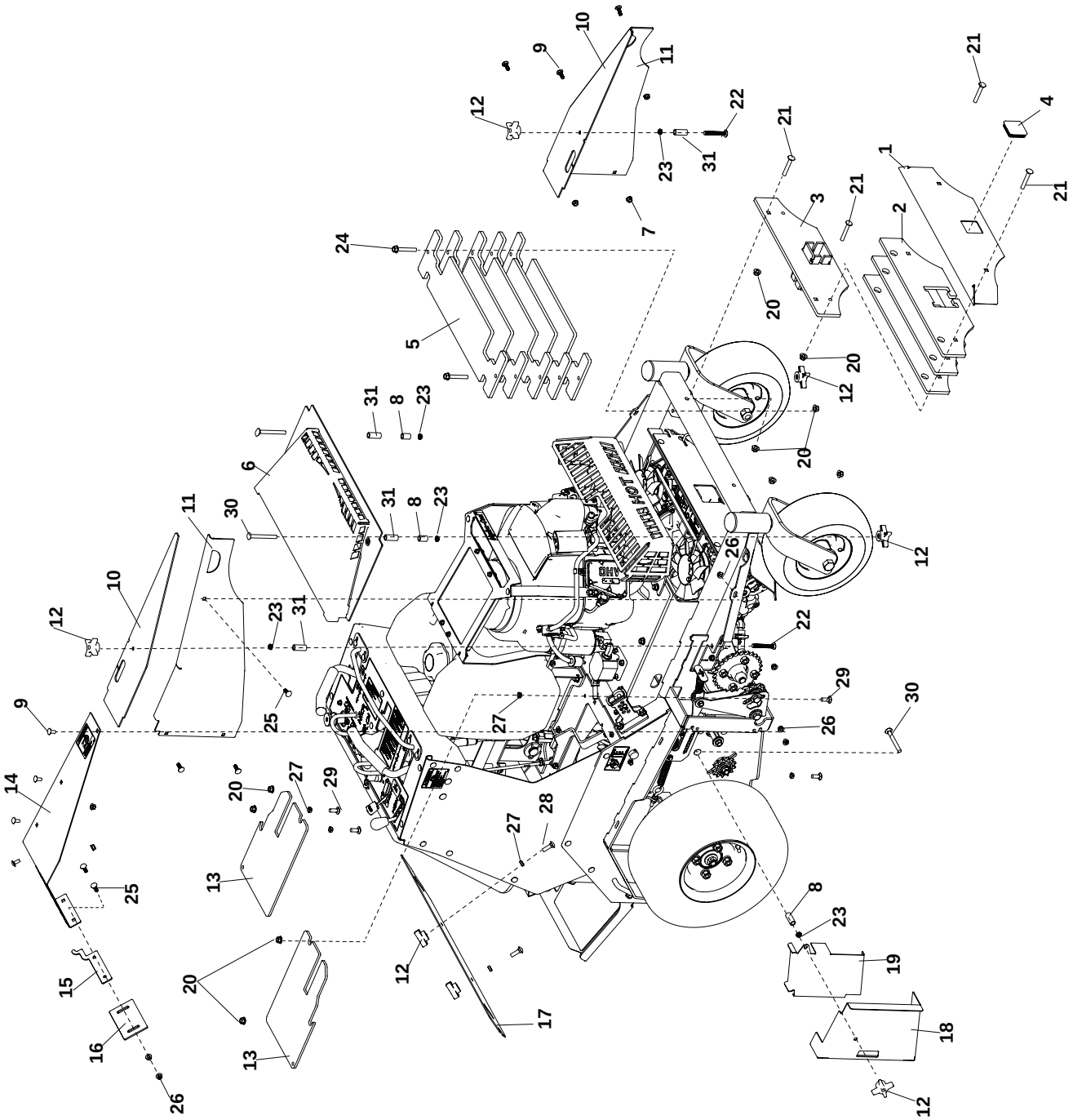
10
9
11
12
22
21
4
23
31
1
21
3
21
2
7
24
20
5
20
12
31
8
23
20
6
31
8
23
11
30
26
12
10
23
31
22
12
29
9
25
27
26
30
14
20
27
29
28
27
13
25
8
23
19
15
20
12
17
18
16
13
26
12

ITEM	PART NO.	DESCRIPTION	QTY
1	4172177.2	COVER-WEIGHT	1
2	4171538.2	PLT-WEIGHT	3
3	4172194.2	WLDMT-HITCH	1
4	4172869	PLUG-HITCH TUBE	1
5	4172703.17	PLT-WEIGHT,CENTER	5
6	4172853.2	WLDMT-COVER FRONT	1
7	64141-6	NUT=WLF 5/16-18	6
8	2183071-03	SPACER-15.88X10.32X24	4
9	64018-51	BLT-CRG 5/16-18 X 3/4 SN	8
10	4171535.2	COVER-TOP FRONT	2
11	4171537.2	COVER-FRONT, RH	1
	4171536.2	COVER-FRONT, LH	1
12	38524	KNOB-4 PRONG 3/8-16	8
13	4171521.2	PLT-TINE COVER,TOP	2
14	4173501	S-FENDER, RIGHT	1
	4173509	S-FENDER, LEFT	1
15	4172800.7	PLT-PIN LOCK	2
16	4171489.7	PLT-TIRE SCRAPER	2
17	4172852.2	PLT-TINE COVER, REAR	1
18	4171484.7	COVER-CHAIN, RH	1
	4171483.7	COVER-CHAIN, LH	1
19	4172229.7	COVER-CHAIN,RH REAR	1
	4172228.7	COVER-CHAIN,LH REAR	1
20	64268-03	NUT-FL NYLON LOCK 3/8-16	10
21	64018-31	BLT-CRG 3/8-16 X 2-1/2	4
22	64018-47	BLT-CRG 3/8-16X2-3/4	2
23	64229-03	NUT-NYLON LOCK, 3/8-16	6
24	64262-025	BLT-FLG HD 3/8-16 X 2-1/2 LG	2
25	64018-15	BLT-CRG 5/16-18X1 SN	10
26	64268-02	NUT-FL NYLON LOCK 5/16-18	18
27	64001-6	NUT-HEX JAM 3/8-16	6
28	64018-7	BLT-CRG 3/8-16X1-1/4	2
29	64018-44	BLT-CRG 3/8-16X1 SN	4
30	64018-55	BLT-CRG 3/8-16X3-1/2	4
31	2183071-02	SPACER-15.88X10.32X32	4

ITEM	PART NO.	DESCRIPTION	QTY

RYAN

FIGURE 16

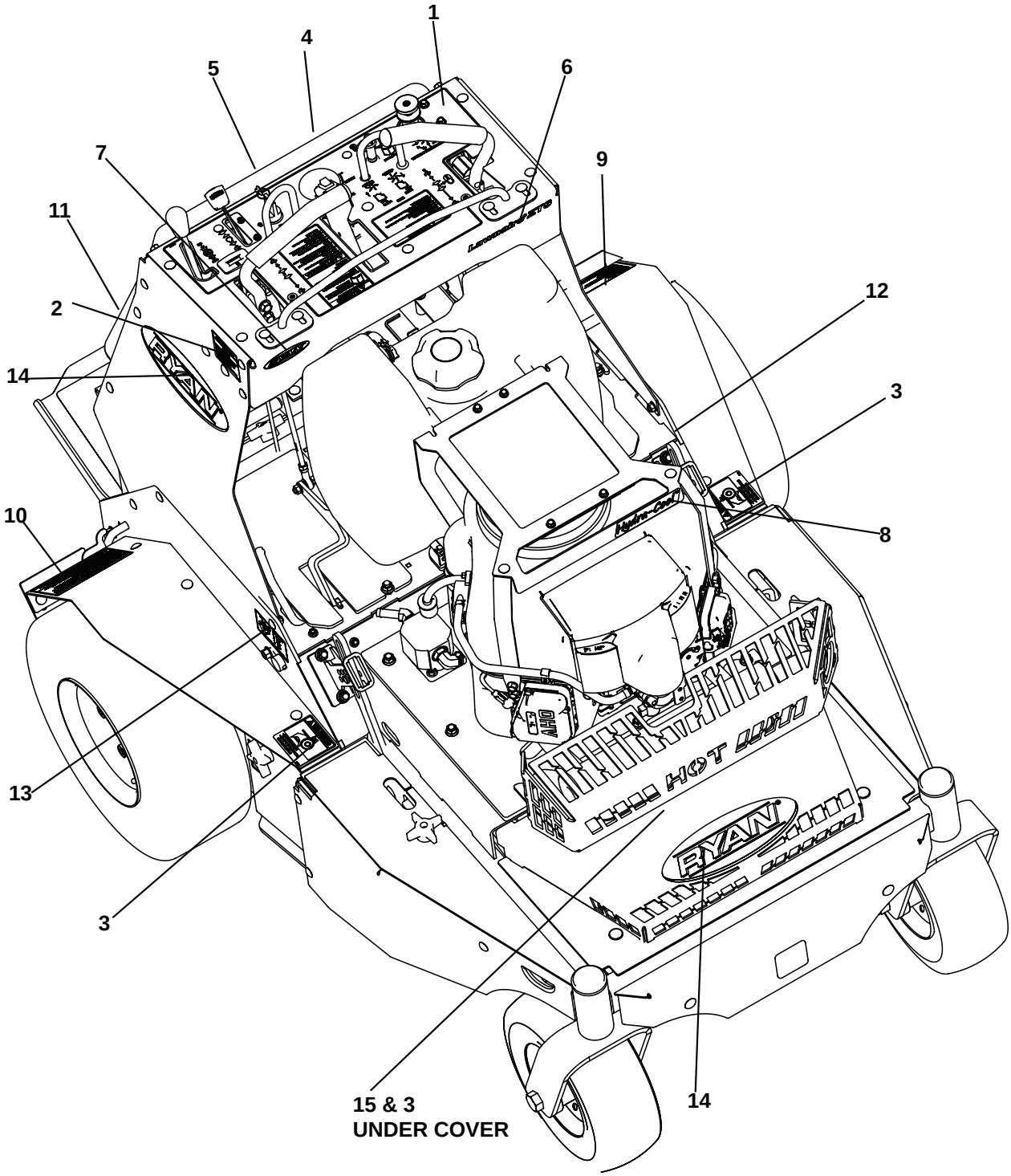
1
4
5
6
7
9
11
2
12
14
3
10
8
13
3
15 & 3
UNDER COVER
14
RYAN
HOT DUMP
Hydro-Cool

FIGURE 16

ITEM	PART NO.	DESCRIPTION	QTY
1	4172858	LABEL- CONTROL PANEL	1
2	2000570	LABEL-WARN FUEL PICT.	2
3	2000577	LABEL WARNING	3
4	2000590	LABEL WARN BATTERY	1
5	4172910	LABEL-RESERVOIR	1
6	4172877	LABEL-LAWNAIRE ZTS	1
7	4161125	LABEL-RYAN OVAL, 3.5"	1
8	4172912	LABEL-HYDRA-COOL	1
9	4172915	LABEL-JACKSTAND	1
10	4172911	LABEL-SLOPES, CA SPARK	1
11	4172914	LABEL-TINES	1
12	4172886	LABEL-DEPTH CONTROL LH	1
13	4172887	LABEL-DEPTH CONTROL RH	1
14	4161123	LABEL-RYAN OVAL, 10"	4
15	4172916	LABEL-BELT ROUTING	1
16*	2000735	LABEL- OP MANUAL	1
		LOCATED ON DOCUMENT TUBE	

ITEM	PART NO.	DESCRIPTION	QTY

SCHILLER GROUNDS CARE, INC.
ONE BOB-CAT LANE
P.O. BOX 469
JOHNSON CREEK, WI 53038
920-699-2000
www.schillergc.com

©Schiller Grounds Care, Inc. 2010